SAMSUNG PROPRIETARY
THIS DOCUMENT CONTAINS CONFIDENTIAL
PROPRIETARY INFORMATION THAT IS
SAMSUNG ELECTRONIS CO'S PROPRIETARY.
DO NOT DISCLOSE TO OR DUPLICATE FOR OTHERS
EXCEPT AS AUTHORIZED BY SAMSUNG.
Comply with the threshold of substances
which are specified in 0QA-2049

BLOCK NAME: high_x6_dvb_led_1st
BLK PAGE NO.: 1 OF 18

<LOCATION SUFFIX>

- _FHD : FHD
- _HD : HD
- _SD : SD
- _NSD : NON SD

- _US : US/KOREA
- _BR : BRAZIL
- _AA : ASIA READY
- _NEU : NON EUROPE
- _NAA : NON ASIA READY
- _TW : TAIWAN / CHINA / COLOMBIA DTV

- _3V3 : SILICON TUNER B3.3V POWER
- _T5V : TUNER 5V POWER
- _33V : TUNER 33V POWER
- _1V8 : TUNER 1.8V POWER
- _2V5 : TUNER 2.5V POWER
- _LNA : LNA POWER
- _FN : FULL NIM TUNER
- _AFT : TUNER AFT SIGNAL
- _RAG : TUNER RF_AGC
- _IAG : TUNER IF_AGC
- _RST : TUNER NRESET
- _DS : SATELLITE TUNER
- _TC : EU TC TUNER
- _PAL : EU DIF FILTER

- _JEIDA : LVDS FORMAT JEIDA
- _VESA : LVDS FORMAT VESA

- _LCD : LCD
- _PDP : PDP

- _13 : PANEL PW 13V
- _NFN : NON FULL NIM(EU OPTION)

- _LAN : ETHERNET
- _SC : SCART SOUND OUT
- _CI : CI OPTION
- _RS : RS232
- _AV : AV2 OPTION

- _MO : MONITOR OUT
- _HP : HEADPHONE OUT

- _FPC : FANET D-SUB
- _FRS : FANET RS232

- Z : DELETE OPTION
- _DB / _JT : DEBUG

COMMON	US/KOREA		
_FHD	_US		
_LCD	_3V3		
_JEIDA	_1V8		
_LAN	_IAG		
_13	_RST		
	_RS		
	_MO		
	_FRS		
	_NEU		
	_NAA		

X6 DVB
BOARD SCHEMATIC

SCHEMATICS INDEX

01_COVER SHEET
02_STANDBY / MAIN POWER
03_SOUND AMP / SCART AMP / HEADPHONE, MONITOR OUT
SPIDF / POP NOISE SOLUTION
04_PC INPUT / EEPROM WRITE PROJECTION
05_SCART / COMPONENT / VIDEO
BOOT STRAP / JTAG / MSTAR CHIP DEBUG
06_X6 HDMI / HDMI INPUT
07_TUNER
08_X6 RGB / X6 CVBS / X6 TUNER / X6 TS / JTAG / DEBUG
09_X6 GPIO / MODE SELECT / MAIN EEPROM
10_X6 POWER
11_X6 DDR / DDR3 MEMORY
12_SUB MICOM / SUB EEPROM / FUNCTION / DEBUG PORT
13_X6 CI / ONENAND / MLC NAND
14_X6 AUDIO / BOOTSTRAP
15_X6 LVDS / X6 USB / X6 ETHERNET / USB INPUT
16_LVDS OUT / DIMMING OUT
17_ETHERNET(PHY)
18_PCMCIA

SCHEMATICS INDEX

LAYER 1 ----- TOP (SIGNAL1)
LAYER 2 ----- INNER 1 (GND)
LAYER 3 ----- INNER 2 (POWER)
LAYER 4 ----- BOTTOM (SIGNAL2)

PROJECT NAME: high_x6_dvb_led_1st		A2	DRAWN BY: Unknown
			CHECKED BY: Unknown
SAMSUNG	DEV.STEP: Unknown	REV.: 1.0	APPROVED BY: Unknown
LAST EDITED TIME: Mon Dec 13 14:19:48 2010			TOTAL PAGE NO.: 1 OF 18

SAMSUNG PROPRIETARY

THIS DOCUMENT CONTAINS CONFIDENTIAL PROPRIETARY INFORMATION THAT IS SAMSUNG ELECTRONIS CO'S PROPRIETARY. DO NOT DISCLOSE TO OR DUPLICATE FOR OTHERS EXCEPT AS AUTHORIZED BY SAMSUNG.

Comply with the threshold of substances which are specified in 0QA-2049

BLOCK NAME	BLK PAGE NO.
high_x6_dvb_led_1st	2 OF 18

THE B1.05V_PW LINE HAS OVER 6 OR 7 VIAS WHEN CHANGING A LAYER THE REASON CONSUMING CURRENT MAX 3700MA

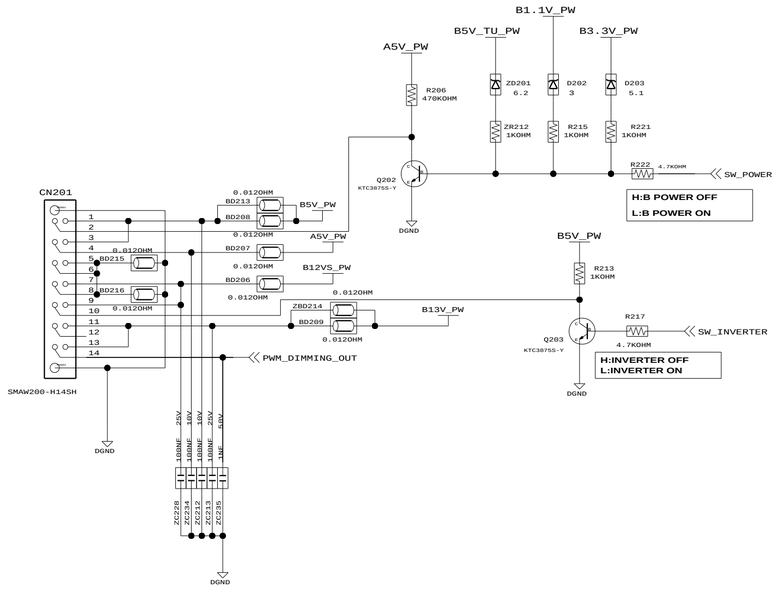

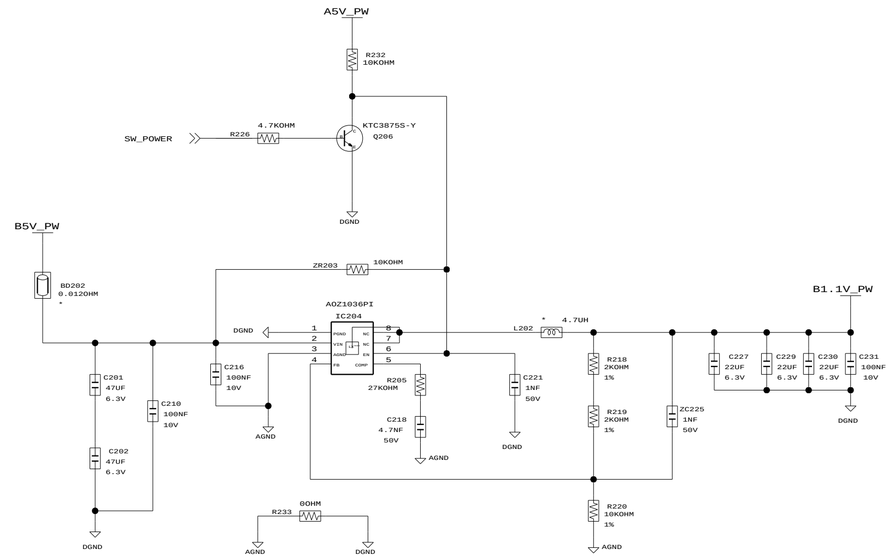

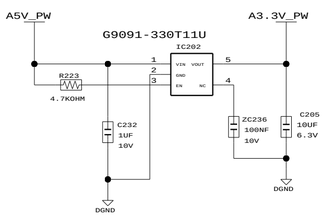

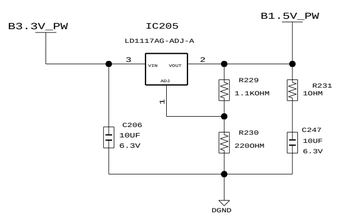

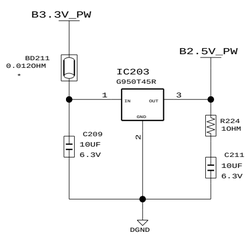

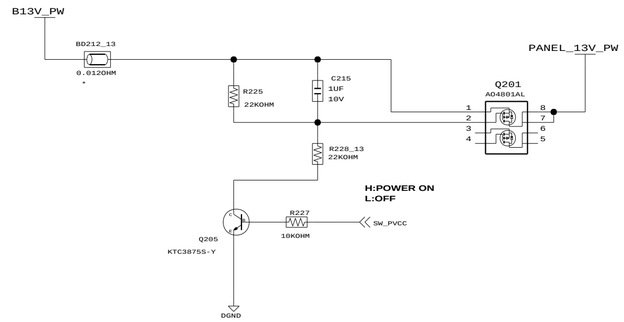

1203-005134(RT9167)
USE ZC236

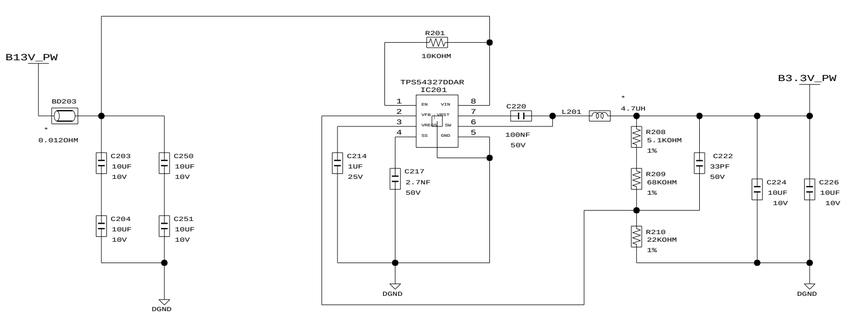

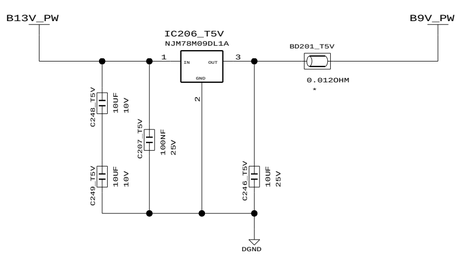

PROJECT NAME			A2	DRAWN BY
high_x6_dvb_led_1st				Unknown
				CHECKED BY Unknown
SAMSUNG	DEV.STEP Unknown	REV. 1.0		APPROVED BY Unknown
LAST EDITED TIME Fri Jan 07 12:52:51 2011				TOTAL PAGE NO. 2 OF 18

D:/atdm/high_x6_dvb_led_1st\high_x6_dvb_led_1st.cpm

SAMSUNG PROPRIETARY

THIS DOCUMENT CONTAINS CONFIDENTIAL PROPRIETARY INFORMATION THAT IS SAMSUNG ELECTRONIS CO'S PROPRIETARY. DO NOT DISCLOSE TO OR DUPLICATE FOR OTHERS EXCEPT AS AUTHORIZED BY SAMSUNG.

Comply with the threshold of substances which are specified in 0QA-2049

BLOCK NAME	BLK PAGE NO.
high_x6_dvb_led_1st	3 OF 18

POP NOISE SOLUTION

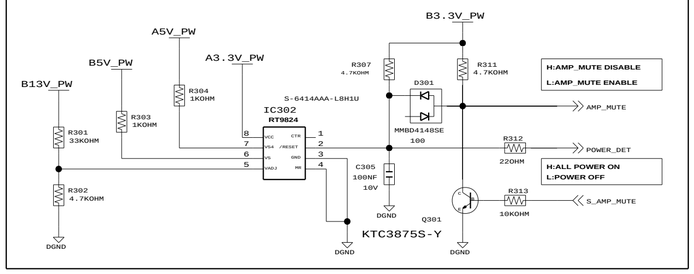

SPDIF OUT

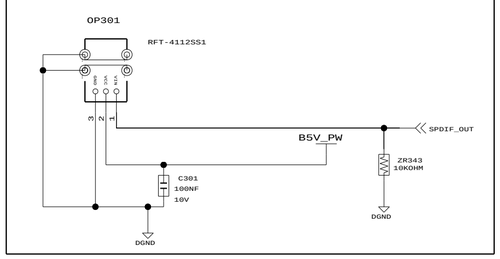

SOUND AMP

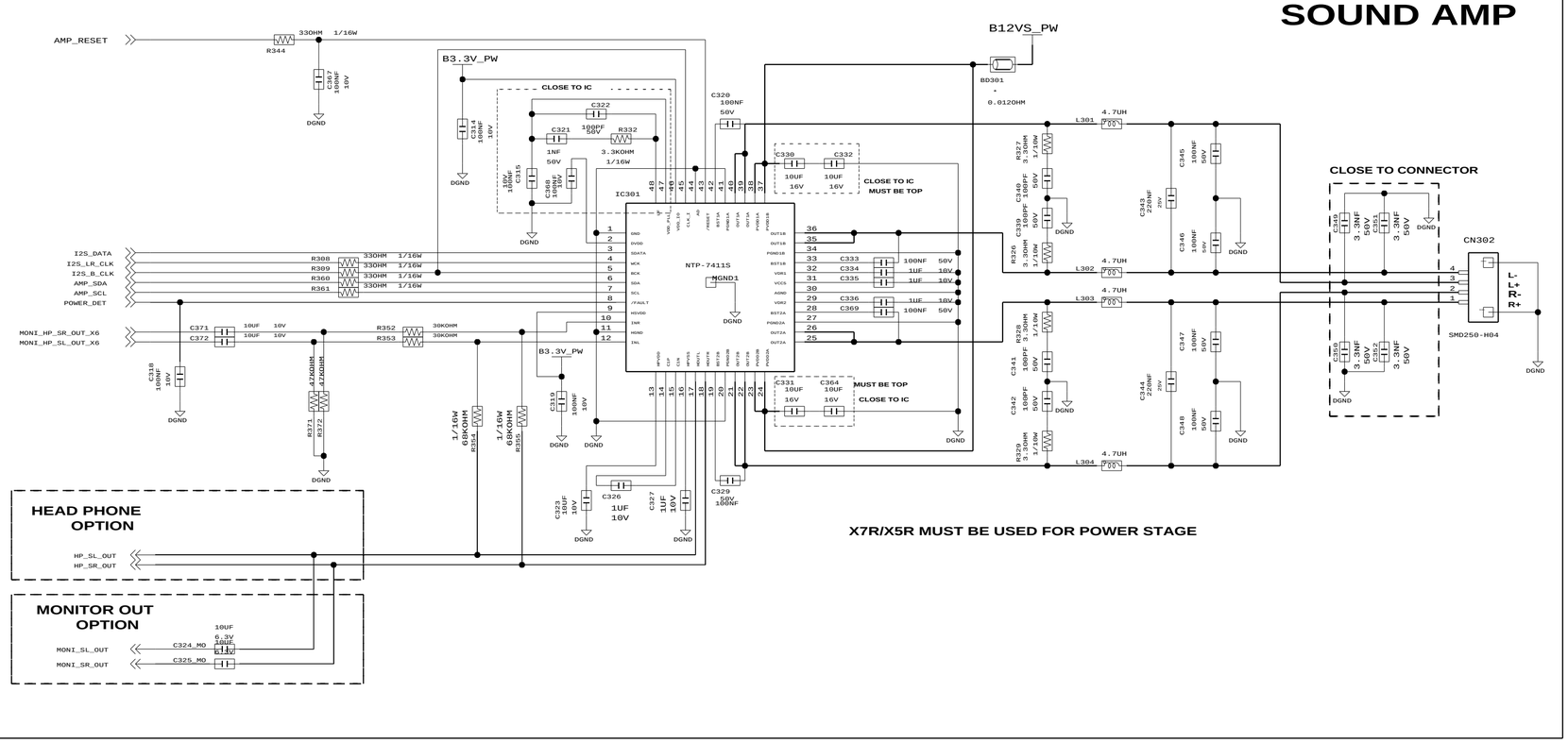

SCART SOUND OUT(ONLY USE EU)

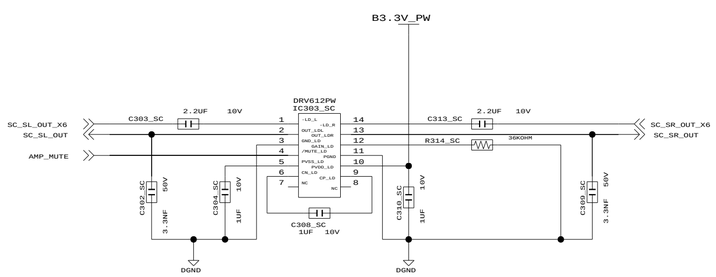

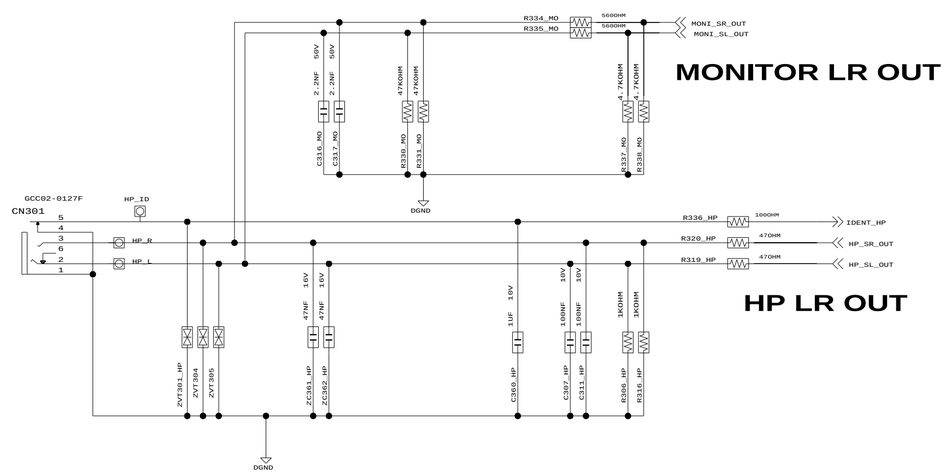

PROJECT NAME			A2	DRAWN BY
high_x6_dvb_led_1st				Unknown
				CHECKED BY Unknown
SAMSUNG	DEV.STEP Unknown	REV. 1.0		APPROVED BY Unknown
LAST EDITED TIME Tue Jan 11 10:35:40 2011				TOTAL PAGE NO. 3 OF 18

D:/atdm/high_x6_dvb_led_1st\high_x6_dvb_led_1st.cpm

SAMSUNG PROPRIETARY
THIS DOCUMENT CONTAINS CONFIDENTIAL
PROPRIETARY INFORMATION THAT IS
SAMSUNG ELECTRONIS CO'S PROPRIETARY.
DO NOT DISCLOSE TO OR DUPLICATE FOR OTHERS
EXCEPT AS AUTHORIZED BY SAMSUNG.
Comply with the threshold of substances
which are specified in 0QA-2049

PC INPUT

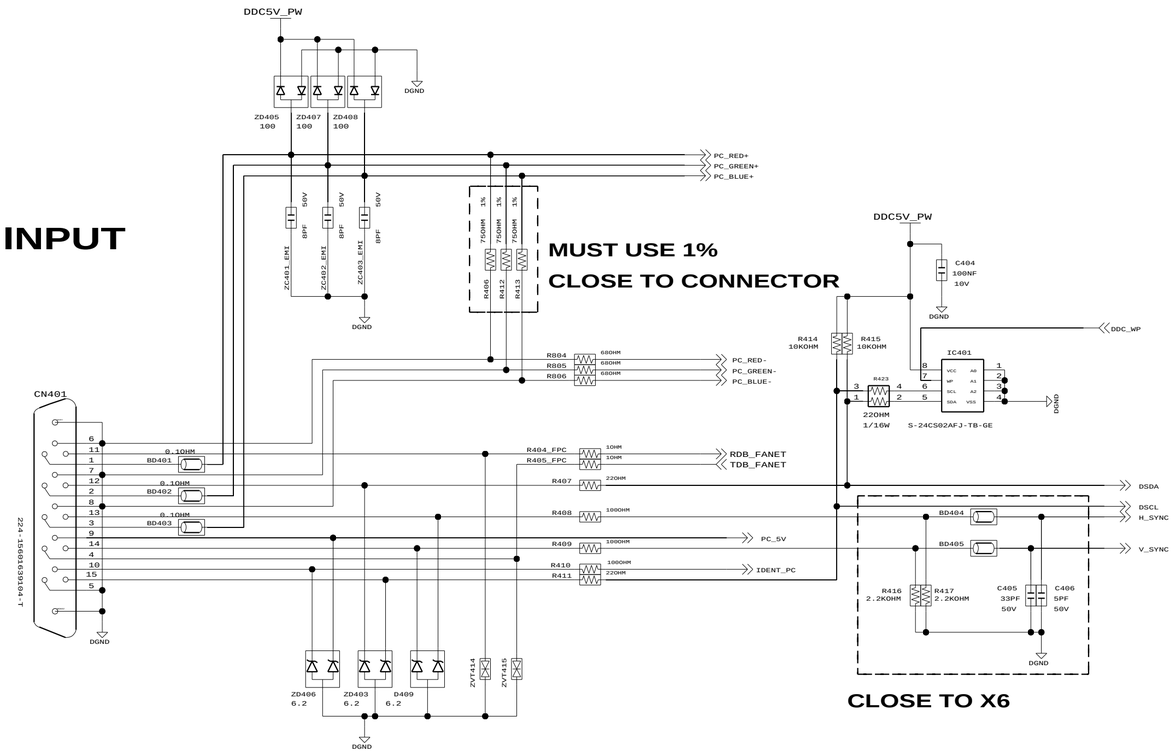

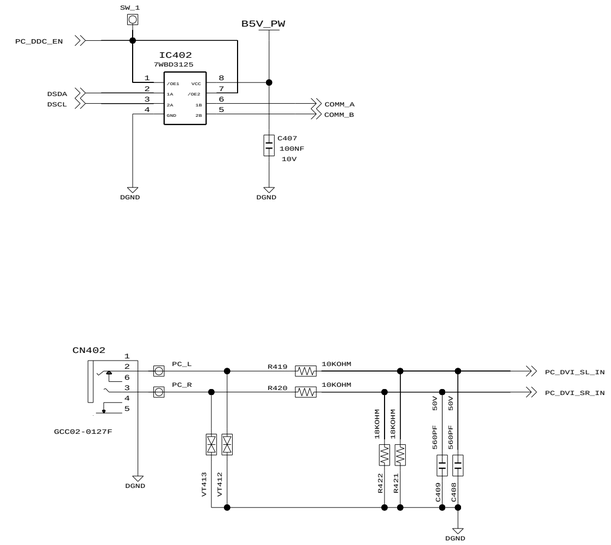

EEPROM WRITE PROTECTION

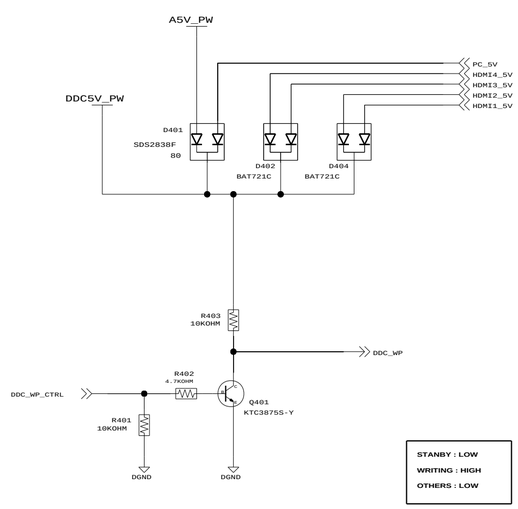

PROJECT NAME: high_x6_dvb_led_1st		A2	DRAWN BY: Unknown
			CHECKED BY: Unknown
SAMSUNG	DEV.STEP: Unknown	REV.: 1.0	APPROVED BY: Unknown
LAST EDITED TIME: Fri Jan 07 12:52:52 2011			TOTAL PAGE NO.: 4 OF 18

SAMSUNG PROPRIETARY
THIS DOCUMENT CONTAINS CONFIDENTIAL
PROPRIETARY INFORMATION THAT IS
SAMSUNG ELECTRONIS CO'S PROPRIETARY.
DO NOT DISCLOSE TO OR DUPLICATE FOR OTHERS
EXCEPT AS AUTHORIZED BY SAMSUNG.
Comply with the threshold of substances
which are specified in 0QA-2049

BLOCK NAME	BLK PAGE NO.
high_x6_dvb_led_1st	5 OF 18

SCART INPUT

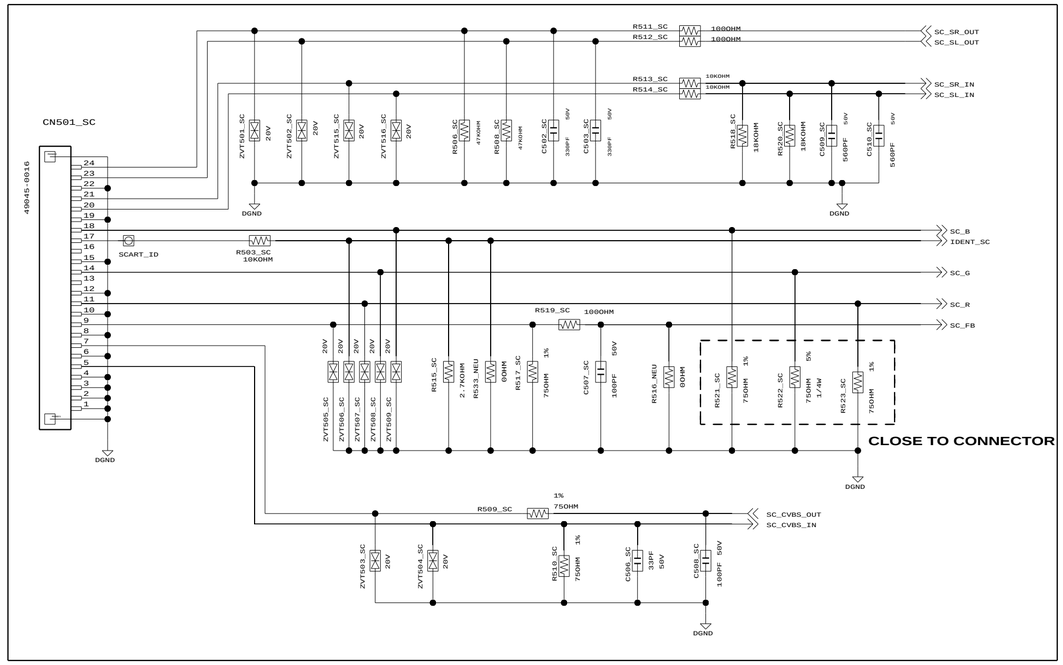

COMP1/VIDEO1 INPUT

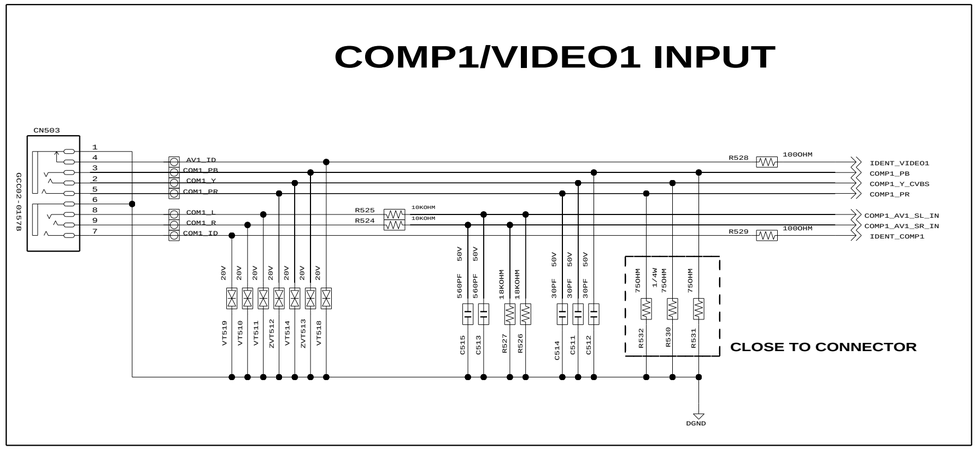

VIDEO2 INPUT

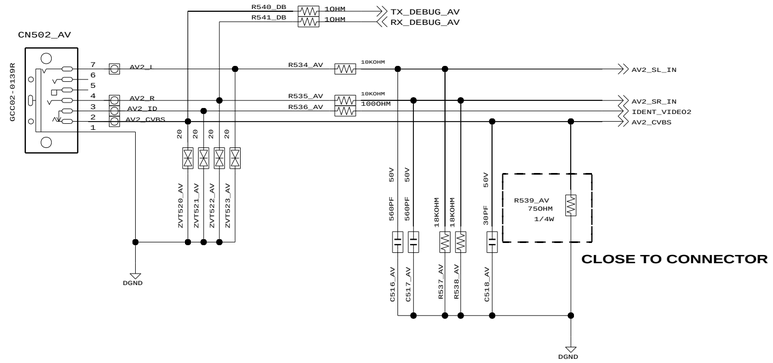

SCART CVBS OUT AMP

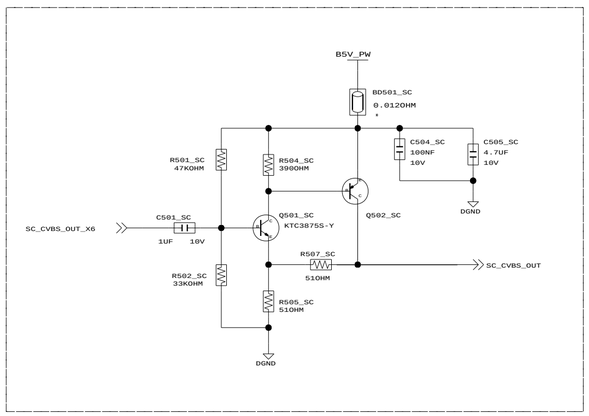

PROJECT NAME			A2	DRAWN BY
high_x6_dvb_led_1st				Unknown
				CHECKED BY Unknown
SAMSUNG	DEV.STEP Unknown	REV. 1.0		APPROVED BY Unknown
LAST EDITED TIME Fri Jan 07 12:52:57 2011				TOTAL PAGE NO. 5 OF 18

SAMSUNG PROPRIETARY
THIS DOCUMENT CONTAINS CONFIDENTIAL
PROPRIETARY INFORMATION THAT IS
SAMSUNG ELECTRONIS CO'S PROPRIETARY.
DO NOT DISCLOSE TO OR DUPLICATE FOR OTHERS
EXCEPT AS AUTHORIZED BY SAMSUNG.
Comply with the threshold of substances
which are specified in 0QA-2049

HDMI

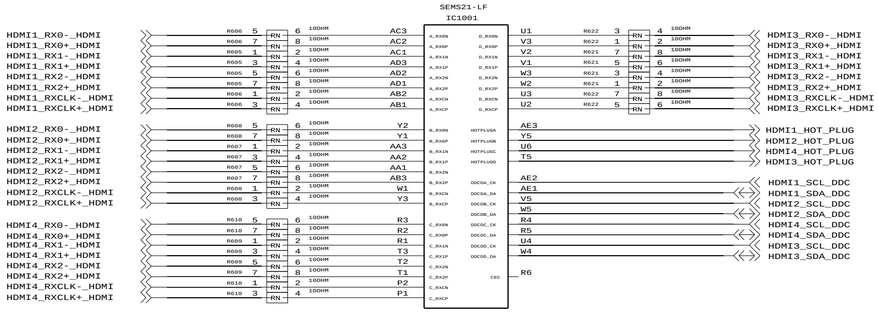

HDMI INPUT1

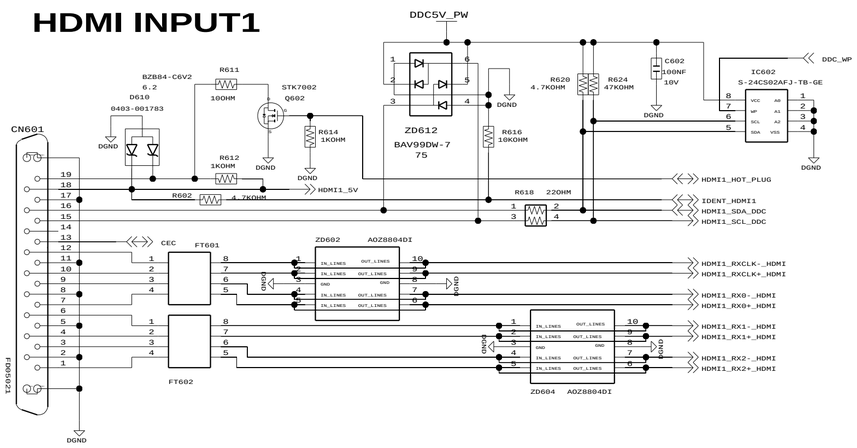

HDMI INPUT2

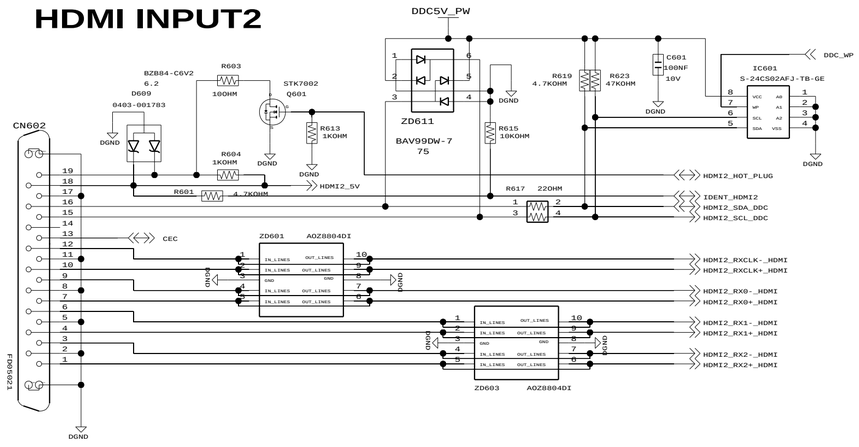

SIDE HDMI INPUT3

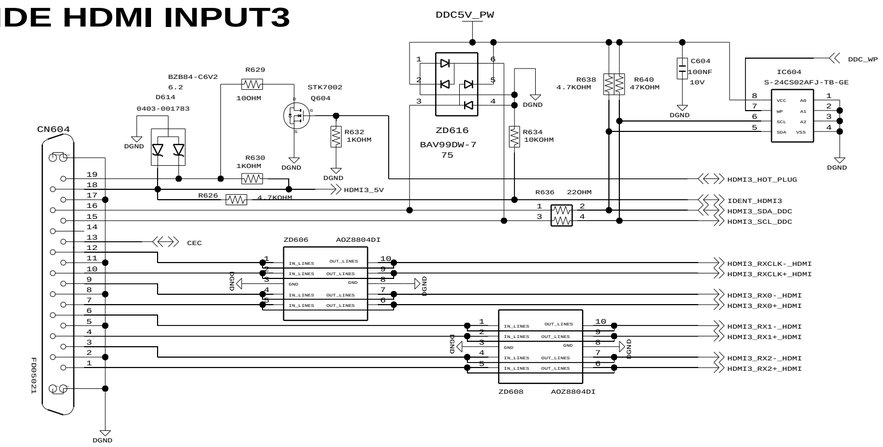

SIDE HDMI INPUT4

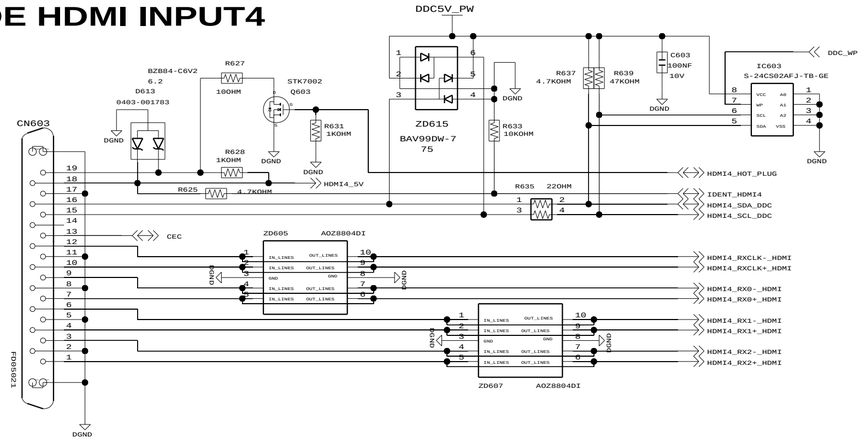

PROJECT NAME: high_x6_dvb_led_1st		A2	DRAWN BY: Unknown
			CHECKED BY: Unknown
SAMSUNG	DEV.STEP: Unknown	REV.: 1.0	APPROVED BY: Unknown
LAST EDITED TIME: Fri Jan 07 12:52:54 2011			TOTAL PAGE NO.: 6 OF 18

SAMSUNG PROPRIETARY
THIS DOCUMENT CONTAINS CONFIDENTIAL
PROPRIETARY INFORMATION THAT IS
SAMSUNG ELECTRONIS CO'S PROPRIETARY.
DO NOT DISCLOSE TO OR DUPLICATE FOR OTHERS
EXCEPT AS AUTHORIZED BY SAMSUNG.
Comply with the threshold of substances
which are specified in 0QA-2049

BLOCK NAME	BLK PAGE NO.
high_x6_dvb_led_1st	7 OF 18

TUNER 33V

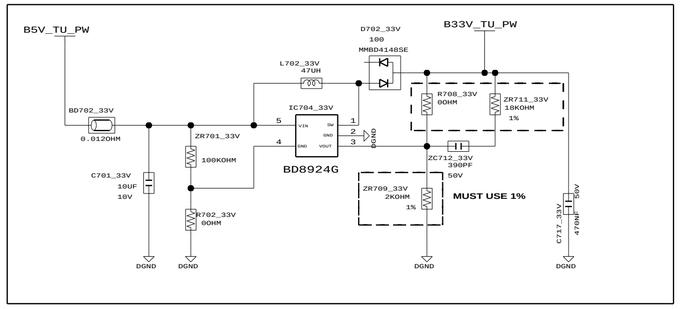

LOCATION	ROHM(BD8924G)	MICREL
IC704_33V	1203-006142	1203-006492
ZR701_33V	DELETE	0OHM(2007-000171)
R702_33V	0OHM(2007-000171)	DELETE
R708_33V	0OHM(2007-000171)	130KOHM(2007-007480)
ZR709_33V	DELETE	1KOHM(2007-007318)
ZR711_33V	DELETE	0OHM(2007-000171)
ZC712_33V	DELETE	3300PF(2203-000715)

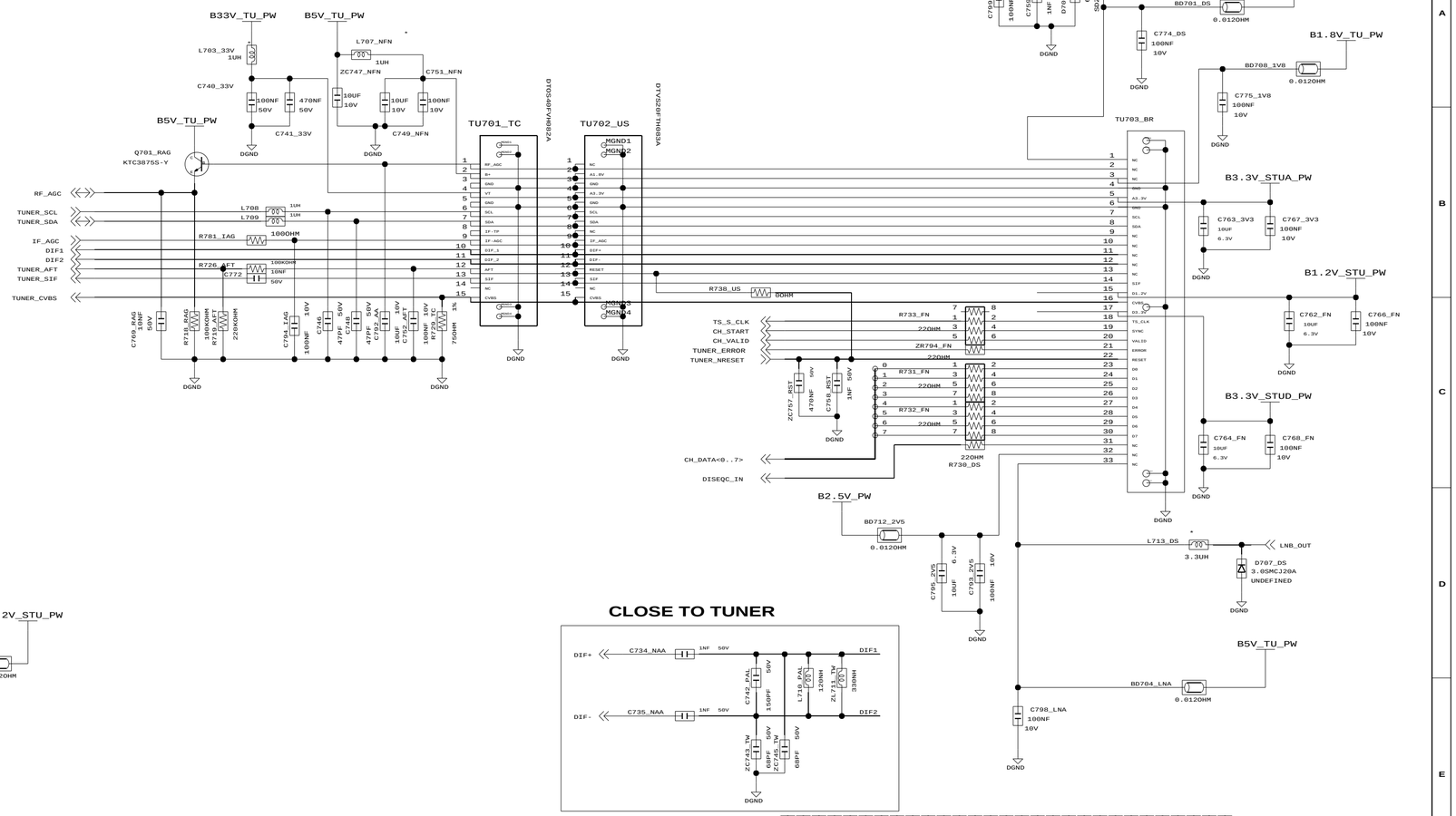

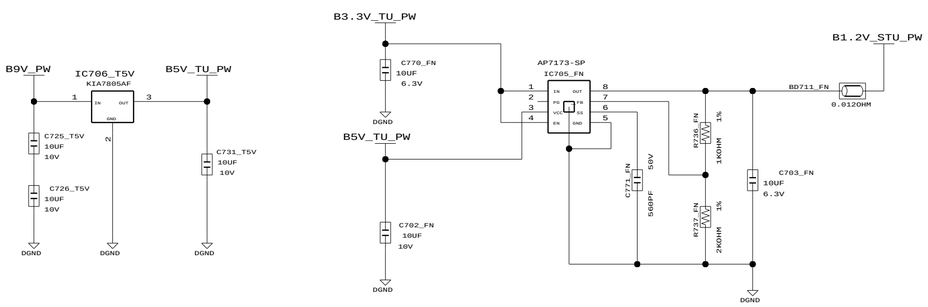

CLOSE TO TUNER

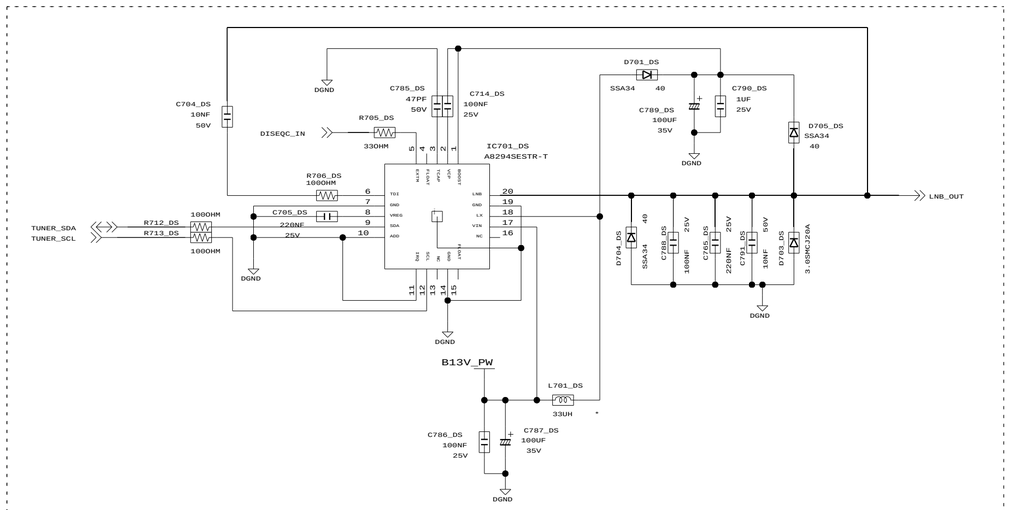

LNB CONTROL PART(DVB-S OPTION)

FULL NIM TUNER CLK BUFFER

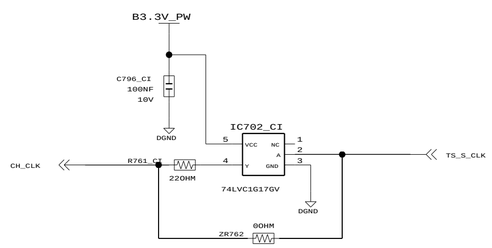

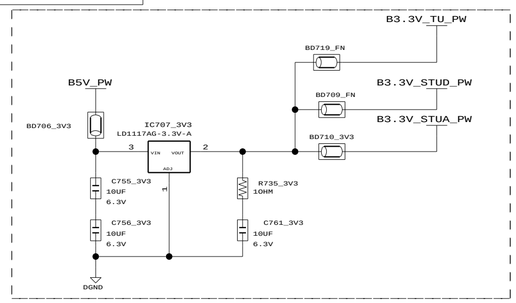

CLOSE TO TUNER

1.8V TUNER OPTION

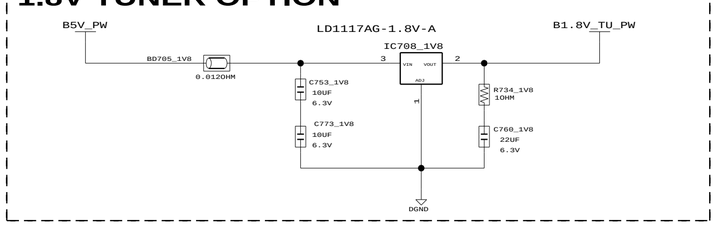

PROJECT NAME			DRAWN BY
high_x6_dvb_led_1st		A2	Unknown
			CHECKED BY Unknown
SAMSUNG	DEV.STEP Unknown	REV. 1.0	APPROVED BY Unknown
LAST EDITED TIME Fri Jan 07 12:52:59 2011			TOTAL PAGE NO. 7 OF 18

SAMSUNG PROPRIETARY
THIS DOCUMENT CONTAINS CONFIDENTIAL
PROPRIETARY INFORMATION THAT IS
SAMSUNG ELECTRONIS CO'S PROPRIETARY.
DO NOT DISCLOSE TO OR DUPLICATE FOR OTHERS
EXCEPT AS AUTHORIZED BY SAMSUNG.
Comply with the threshold of substances
which are specified in 0QA-2049

BLOCK NAME: high_x6_dvb_led_1st
BLK PAGE NO.: 8 OF 18

RGB CVBS

CLOSE TO PC CONNECTOR

PC_RED+
PC_GREEN+
PC_BLUE+
PC_RED-
PC_GREEN-
PC_BLUE-
H_SYNC
V_SYNC
SC_R
SC_G
SC_B
IDENT_SC
SC_FB
COMP1_PR
COMP1_Y_CVBS
COMP1_PB
TUNER_CVBS
AV2_CVBS
SC_CVBS_IN
SC_CVBS_OUT_X6

CLOSE TO X6

SEMS21-LF
IC1001

B3.3V_PW

R825_IAG 1KOHM

TUNER JTAG

IF_AGC
RF_AGC
DIF+
DIF-
TUNER_SIF
EJ_RSTZ
EJ_TRSTN
EJ_TCK
EJ_TMS
EJ_TDI
EJ_TDO
EJ_DINT

ZIF_QP R830_AA 2KOHM 2KOHM DGND
ZIF_QM R831_AA

ZIF_IP ZC827 100NF 10V DIF+_1
ZIF_IM ZC828 100NF 10V DIF-_1

WILL BE DELETED WHEN FIX CIRCUIT

JTAG

B3.3V_PW

R831 4.7KOHM, R840 4.7KOHM, R841 4.7KOHM, R839 10KOHM

EJ_TDI
EJ_TDO
EJ_TMS
EJ_TCK
EJ_RSTZ
EJ_TRSTN
EJ_DINT

R836 4.7KOHM
R837 47KOHM
DGND

MSTAR CHIP DEBUG

A5V_PW
CN801_DB
SMW250-H04
COMM_A
COMM_B
DGND

TS

SEMS21-LF
IC1001

TS0_DATA<0..7>
TS0_CLK
TS0_VALID
TS0_START
CH_DATA<0..7>
TS_S_CLK
CH_VALID
CH_START

PROJECT NAME: high_x6_dvb_led_1st		A2	DRAWN BY: Unknown
			CHECKED BY: Unknown
SAMSUNG	DEV.STEP: Unknown	REV.: 1.0	APPROVED BY: Unknown
LAST EDITED TIME: Fri Jan 07 12:53:00 2011			TOTAL PAGE NO.: 8 OF 18

D:/atdm/high_x6_dvb_led_1st\high_x6_dvb_led_1st.cpm

SAMSUNG PROPRIETARY

THIS DOCUMENT CONTAINS CONFIDENTIAL PROPRIETARY INFORMATION THAT IS SAMSUNG ELECTRONIS CO'S PROPRIETARY. DO NOT DISCLOSE TO OR DUPLICATE FOR OTHERS EXCEPT AS AUTHORIZED BY SAMSUNG.

Comply with the threshold of substances which are specified in 0QA-2049

BLOCK NAME	BLK PAGE NO.
high_x6_dvb_led_1st	9 OF 18

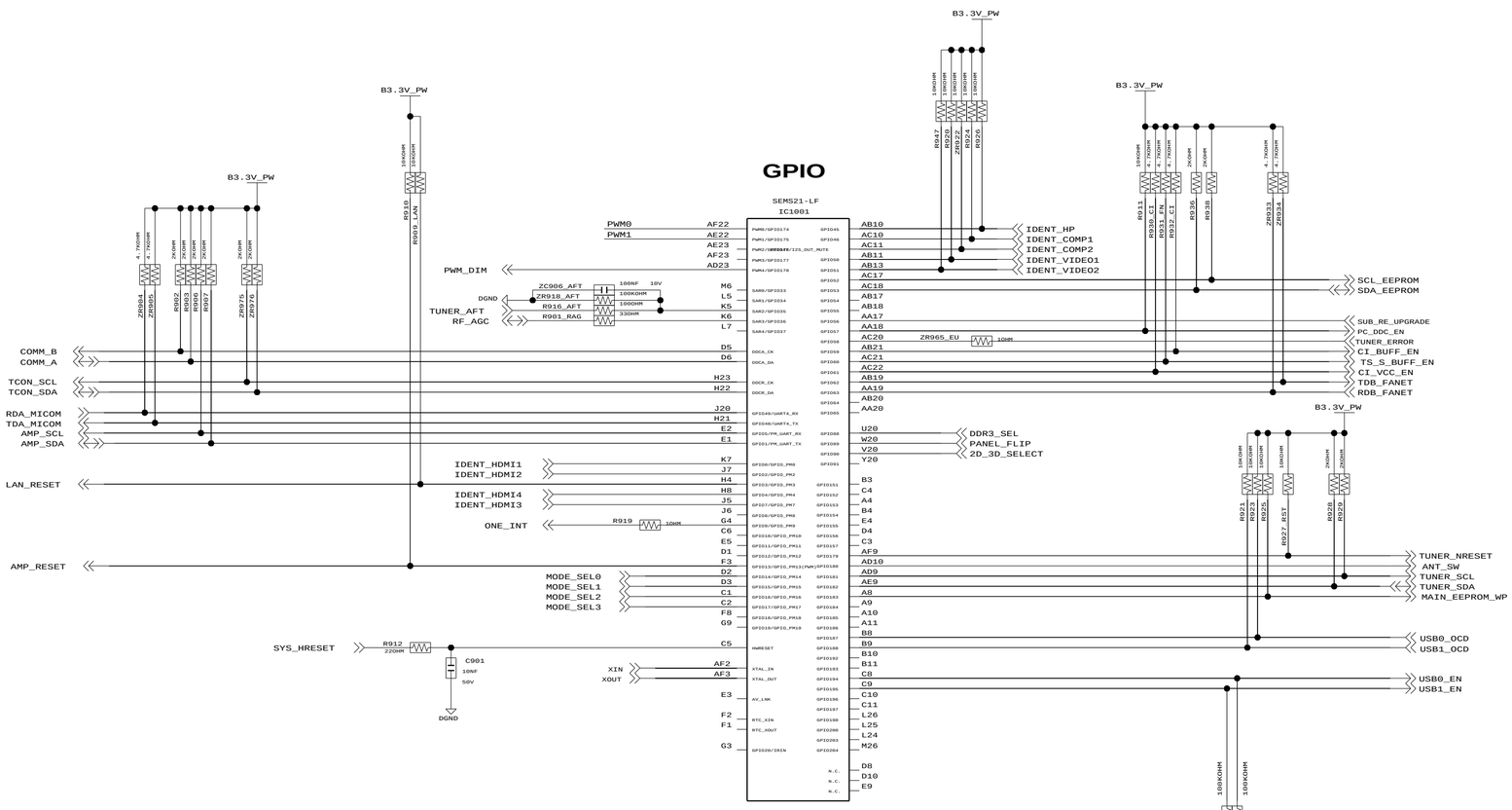

DDR3_SELECT

PULL UP : 512MB

PULL DOWN : 384MB

MODE_SEL

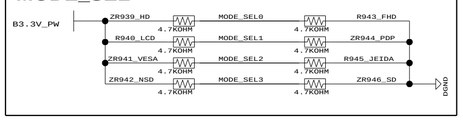

EEPROM

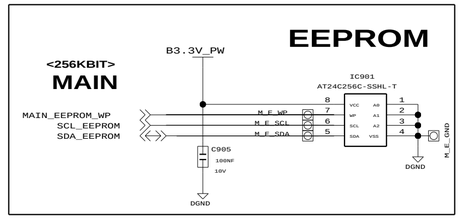

FAST LOGO

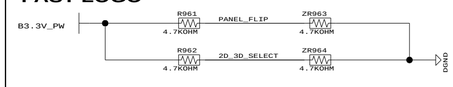

PANEL FLIP - HIGH : ON / LOW : OFF

2D_3D_SELECT - HIGH : 2D / LOW : 3D

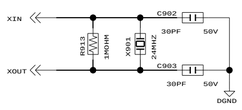

PROJECT NAME			A2	DRAWN BY
high_x6_dvb_led_1st				Unknown
				CHECKED BY Unknown
SAMSUNG	DEV.STEP Unknown	REV. 1.0		APPROVED BY Unknown
LAST EDITED TIME Fri Jan 07 12:52:50 2011				TOTAL PAGE NO. 9 OF 18

SAMSUNG PROPRIETARY
THIS DOCUMENT CONTAINS CONFIDENTIAL
PROPRIETARY INFORMATION THAT IS
SAMSUNG ELECTRONIS CO'S PROPRIETARY.
DO NOT DISCLOSE TO OR DUPLICATE FOR OTHERS
EXCEPT AS AUTHORIZED BY SAMSUNG.
Comply with the threshold of substances
which are specified in 0QA-2049

POWER

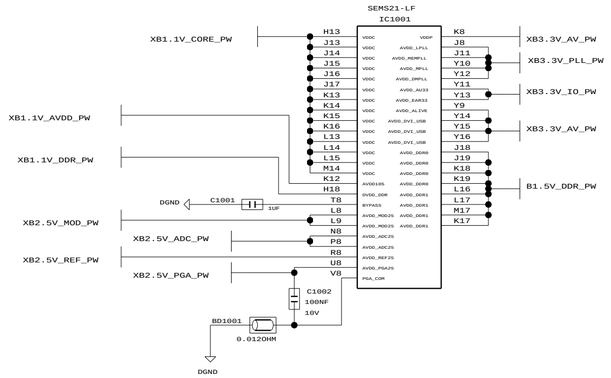

GROUND

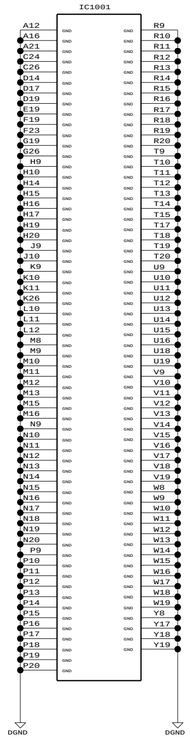

CLOSE TO MSTAR IC

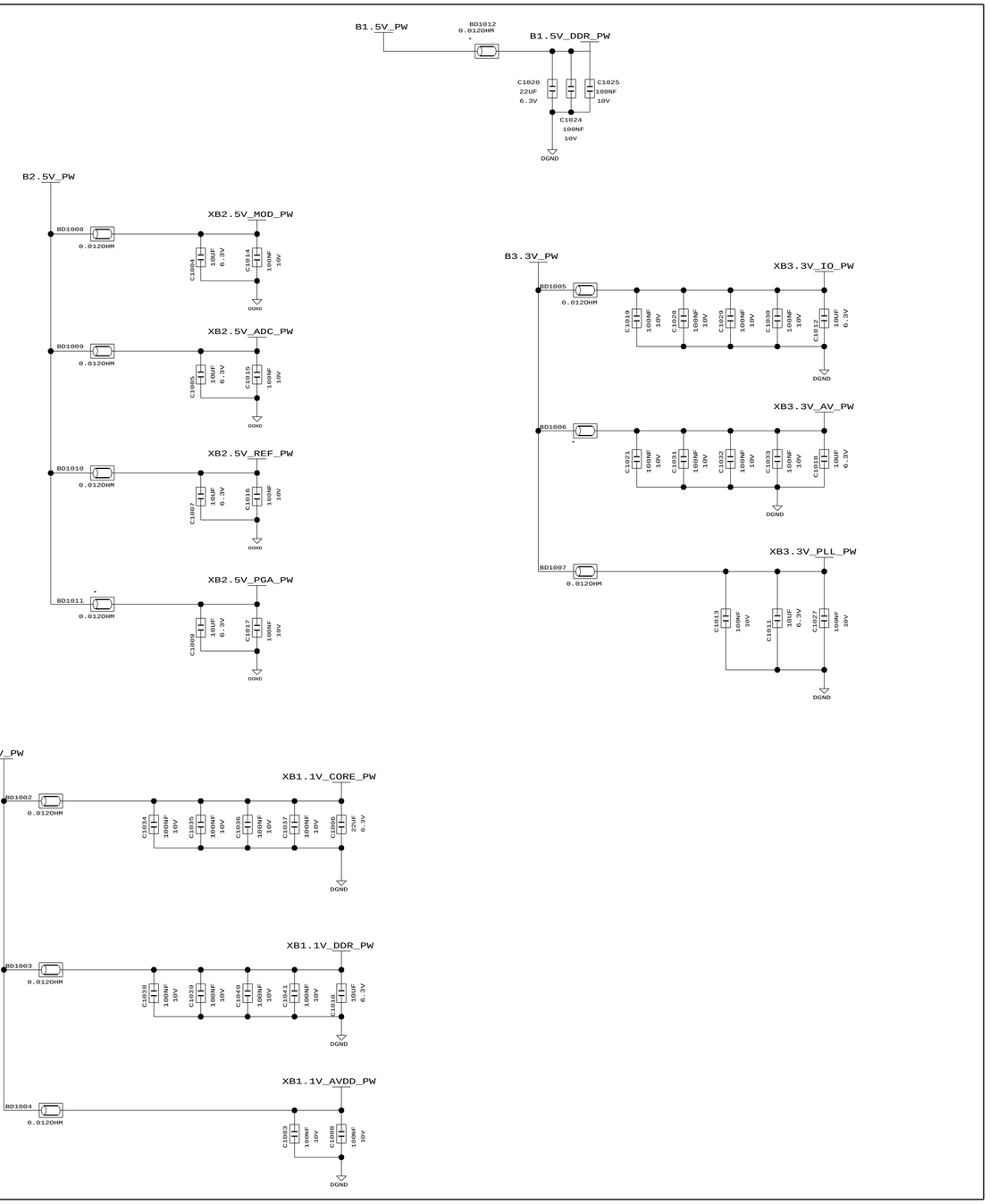

PROJECT NAME: high_x6_dvb_led_1st		A2	DRAWN BY: Unknown
			CHECKED BY: Unknown
SAMSUNG	DEV.STEP: Unknown	REV.: 1.0	APPROVED BY: Unknown
LAST EDITED TIME: Fri Jan 07 12:53:02 2011			TOTAL PAGE NO.: 10 OF 18

SAMSUNG PROPRIETARY
THIS DOCUMENT CONTAINS CONFIDENTIAL
PROPRIETARY INFORMATION THAT IS
SAMSUNG ELECTRONIS CO'S PROPRIETARY.
DO NOT DISCLOSE TO OR DUPLICATE FOR OTHERS
EXCEPT AS AUTHORIZED BY SAMSUNG.
Comply with the threshold of substances
which are specified in 0QA-2049

BLOCK NAME	BLK PAGE NO.
high_x6_dvb_led_1st	11 OF 18

DDR3_A 256M_MIU0

DDR

SEMS21-LF
IC1001

DDR3_A_MADR0_ADDR	G18	A_DDR3_A0 / B_DDR3_A0	G20	DDR3_B_MADR0_ADDR
DDR3_A_MADR1_ADDR	G13	A_DDR3_A1 / B_DDR3_A1	D20	DDR3_B_MADR1_ADDR
DDR3_A_MADR2_ADDR	F18	A_DDR3_A2 / B_DDR3_A2	G21	DDR3_B_MADR2_ADDR
DDR3_A_MADR3_ADDR	G16	A_DDR3_A3 / B_DDR3_A3	E22	DDR3_B_MADR3_ADDR
DDR3_A_MADR4_ADDR	G14	A_DDR3_A4 / B_DDR3_A4	C22	DDR3_B_MADR4_ADDR
DDR3_A_MADR5_ADDR	D18	A_DDR3_A5 / B_DDR3_A5	F20	DDR3_B_MADR5_ADDR
DDR3_A_MADR6_ADDR	D13	A_DDR3_A6 / B_DDR3_A6	A22	DDR3_B_MADR6_ADDR
DDR3_A_MADR7_ADDR	E17	A_DDR3_A7 / B_DDR3_A7	F22	DDR3_B_MADR7_ADDR
DDR3_A_MADR8_ADDR	E13	A_DDR3_A8 / B_DDR3_A8	B22	DDR3_B_MADR8_ADDR
DDR3_A_MADR9_ADDR	G17	A_DDR3_A9 / B_DDR3_A9	G23	DDR3_B_MADR9_ADDR
DDR3_A_MADR10_ADDR	E14	A_DDR3_A10 / B_DDR3_A10	C23	DDR3_B_MADR10_ADDR
DDR3_A_MADR11_ADDR	F13	A_DDR3_A11 / B_DDR3_A11	C21	DDR3_B_MADR11_ADDR
DDR3_A_MADR12_ADDR	G15	A_DDR3_A12 / B_DDR3_A12	A23	DDR3_B_MADR12_ADDR
DDR3_A_MADR13_ADDR	E18	A_DDR3_A13 / B_DDR3_A13	G22	DDR3_B_MADR13_ADDR
DDR3_A_MADR14_ADDR	F12	A_DDR3_A14 / B_DDR3_A14	B21	DDR3_B_MADR14_ADDR
DDR3_A_MDATAL0_DQ	A19	A_DDR3_DQL0 / B_DDR3_DQL0	J25	DDR3_B_MDATAL0_DQ
DDR3_A_MDATAL1_DQ	C14	A_DDR3_DQL1 / B_DDR3_DQL1	C25	DDR3_B_MDATAL1_DQ
DDR3_A_MDATAL2_DQ	C20	A_DDR3_DQL2 / B_DDR3_DQL2	J26	DDR3_B_MDATAL2_DQ
DDR3_A_MDATAL3_DQ	B14	A_DDR3_DQL3 / B_DDR3_DQL3	D24	DDR3_B_MDATAL3_DQ
DDR3_A_MDATAL4_DQ	A20	A_DDR3_DQL4 / B_DDR3_DQL4	K25	DDR3_B_MDATAL4_DQ
DDR3_A_MDATAL5_DQ	A13	A_DDR3_DQL5 / B_DDR3_DQL5	B26	DDR3_B_MDATAL5_DQ
DDR3_A_MDATAL6_DQ	B20	A_DDR3_DQL6 / B_DDR3_DQL6	K24	DDR3_B_MDATAL6_DQ
DDR3_A_MDATAL7_DQ	B13	A_DDR3_DQL7 / B_DDR3_DQL7	B25	DDR3_B_MDATAL7_DQ
DDR3_A_MDATAU0_DQ	A15	A_DDR3_DQU0 / B_DDR3_DQU0	E25	DDR3_B_MDATAU0_DQ
DDR3_A_MDATAU1_DQ	C18	A_DDR3_DQU1 / B_DDR3_DQU1	G25	DDR3_B_MDATAU1_DQ
DDR3_A_MDATAU2_DQ	C15	A_DDR3_DQU2 / B_DDR3_DQU2	D26	DDR3_B_MDATAU2_DQ
DDR3_A_MDATAU3_DQ	A18	A_DDR3_DQU3 / B_DDR3_DQU3	H25	DDR3_B_MDATAU3_DQ
DDR3_A_MDATAU4_DQ	C16	A_DDR3_DQU4 / B_DDR3_DQU4	E26	DDR3_B_MDATAU4_DQ
DDR3_A_MDATAU5_DQ	C19	A_DDR3_DQU5 / B_DDR3_DQU5	H26	DDR3_B_MDATAU5_DQ
DDR3_A_MDATAU6_DQ	B15	A_DDR3_DQU6 / B_DDR3_DQU6	E24	DDR3_B_MDATAU6_DQ
DDR3_A_MDATAU7_DQ	B18	A_DDR3_DQU7 / B_DDR3_DQU7	H24	DDR3_B_MDATAU7_DQ
DDR3_A_BA0_ADDR	F16	A_DDR3_BA0 / B_DDR3_BA0	E23	DDR3_B_BA0_ADDR
DDR3_A_BA1_ADDR	F14	A_DDR3_BA1 / B_DDR3_BA1	B23	DDR3_B_BA1_ADDR
DDR3_A_BA2_ADDR	D16	A_DDR3_BA2 / B_DDR3_BA2	E21	DDR3_B_BA2_ADDR
DDR3_A_DQML_DQ	A14	A_DDR3_DQML / B_DDR3_DQML	D25	DDR3_B_DQML_DQ
DDR3_A_DQMU_DQ	B19	A_DDR3_DQMU / B_DDR3_DQMU	J24	DDR3_B_DQMU_DQ
DDR3_A_DQSL+_DQS	A17	A_DDR3_DQSL / B_DDR3_DQSL	G24	DDR3_B_DQSL+_DQS
DDR3_A_DQSU+_DQS	C17	A_DDR3_DQSU / B_DDR3_DQSU	F25	DDR3_B_DQSU+_DQS
DDR3_A_DQSL-_DQS	B17	A_DDR3_DQSLB / B_DDR3_DQSLB	F26	DDR3_B_DQSL-_DQS
DDR3_A_DQSU-_DQS	B16	A_DDR3_DQSUB / B_DDR3_DQSUB	F24	DDR3_B_DQSU-_DQS
DDR3_A_M+_CLK	B12	A_DDR3_MCLK / B_DDR3_MCLK	A25	DDR3_B_M+_CLK
DDR3_A_M-_CLK	C12	A_DDR3_MCLKZ / B_DDR3_MCLKZ	A24	DDR3_B_M-_CLK
DDR3_A_CASZ_ADDR	E16	A_DDR3_CASZ / B_DDR3_CASZ	E20	DDR3_B_CASZ_ADDR
DDR3_A_RASZ_ADDR	D15	A_DDR3_RASZ / B_DDR3_RASZ	D21	DDR3_B_RASZ_ADDR
DDR3_A_CKE_ADDR	C13	A_DDR3_CKE / B_DDR3_CKE	B24	DDR3_B_CKE_ADDR
DDR3_A_WEZ_ADDR	F15	A_DDR3_WEZ / B_DDR3_WEZ	D22	DDR3_B_WEZ_ADDR
DDR3_A_ODT_ADDR	E15	A_DDR3_ODT / B_DDR3_ODT	D23	DDR3_B_ODT_ADDR
DDR3_A_RESET_ADDR	F17	A_DDR3_RESET / B_DDR3_RESET	F21	DDR3_B_RESET_ADDR

B1.5V_DDR_PW

MT41J128M16HA-15E
IC1101

B1.5V_DDR_PW: R1106 1KOHM 5%; C1103 1NF; C1105 10NF 10V; R1107 1KOHM 5%; DGND

B1.5V_DDR_PW: R1112 1KOHM 5%; R1113 1KOHM 1%; C1107 10NF 10V; C1109 1NF; DGND

VREFCA_A — VREFDQ_A

DDR3_AMADR0_ADDR	N3	E3	DDR3_AMDATAL0_DQ
DDR3_AMADR1_ADDR	P7	F7	DDR3_AMDATAL1_DQ
DDR3_AMADR2_ADDR	P3	F2	DDR3_AMDATAL2_DQ
DDR3_AMADR3_ADDR	N2	F8	DDR3_AMDATAL3_DQ
DDR3_AMADR4_ADDR	P8	H3	DDR3_AMDATAL4_DQ
DDR3_AMADR5_ADDR	P2	H8	DDR3_AMDATAL5_DQ
DDR3_AMADR6_ADDR	R8	G2	DDR3_AMDATAL6_DQ
DDR3_AMADR7_ADDR	R2	H7	DDR3_AMDATAL7_DQ
DDR3_AMADR8_ADDR	T8	D7	DDR3_AMDATAU0_DQ
DDR3_AMADR9_ADDR	R3	C3	DDR3_AMDATAU1_DQ
DDR3_AMADR10_ADDR	L7	C8	DDR3_AMDATAU2_DQ
DDR3_AMADR11_ADDR	R7	C2	DDR3_AMDATAU3_DQ
DDR3_AMADR12_ADDR	N7	A7	DDR3_AMDATAU4_DQ
DDR3_AMADR13_ADDR	T3	A2	DDR3_AMDATAU5_DQ
DDR3_AMADR14_ADDR	T7	B8	DDR3_AMDATAU6_DQ
	M7	A3	DDR3_AMDATAU7_DQ
DDR3_ADQSL+_DQS	F3	B1	
DDR3_ADQSL-_DQS	G3	B9	
DDR3_ADQSU+_DQS	C7	D1	
DDR3_ADQSU-_DQS	B7	D8	
DDR3_ADQML_DQ	E7	E2	
DDR3_ADQMU_DQ	D3	E8	
DDR3_ABA0_ADDR	M2	F9	
DDR3_ABA1_ADDR	N8	G1	
DDR3_ABA2_ADDR	M3	G9	
DDR3_ADDT_ADDR	K1		
	L8		
R1110 240OHM 1%			
DDR3_AM+_CLK	J7	A9	
DDR3_AM-_CLK	K7	B3	
DDR3_ACKE_ADDR	K9	E1	
	L2	G8	
DDR3_ACASZ_ADDR	K3	J2	
DDR3_ARASZ_ADDR	J3	J8	
DDR3_AWEZ_ADDR	L3	M1	
DDR3_ARESET_ADDR	T2	M9	
	J1	P1	
	J9	P9	
	L1	T1	
	L9	T9	

DGND

DDR3_A_MDATAL6_DQ	R1101 2	1	22OHM DDR3_AMDATAL6_DQ
DDR3_A_MDATAL2_DQ	R1101 4	3	22OHM DDR3_AMDATAL2_DQ
DDR3_A_MDATAL0_DQ	R1101 6	5	22OHM DDR3_AMDATAL0_DQ
DDR3_A_DQMU_DQ	R1101 8	7	22OHM DDR3_ADQMU_DQ
DDR3_A_MDATAU5_DQ	R1116 2	1	22OHM DDR3_AMDATAU5_DQ
DDR3_A_MDATAU3_DQ	R1116 4	3	22OHM DDR3_AMDATAU3_DQ
DDR3_A_MDATAU7_DQ	R1116 6	5	22OHM DDR3_AMDATAU7_DQ
DDR3_A_MDATAU1_DQ	R1116 8	7	22OHM DDR3_AMDATAU1_DQ
DDR3_A_DQSL+_DQS	R1117 2	1	22OHM DDR3_ADQSL+_DQS
DDR3_A_DQSL-_DQS	R1117 4	3	22OHM DDR3_ADQSL-_DQS
DDR3_A_DQSU+_DQS	R1117 6	5	22OHM DDR3_ADQSU+_DQS
DDR3_A_DQSU-_DQS	R1117 8	7	22OHM DDR3_ADQSU-_DQS
DDR3_A_MDATAU4_DQ	R1118 2	1	22OHM DDR3_AMDATAU4_DQ
DDR3_A_MDATAU0_DQ	R1118 4	3	22OHM DDR3_AMDATAU0_DQ
DDR3_A_MDATAU6_DQ	R1118 6	5	22OHM DDR3_AMDATAU6_DQ
DDR3_A_MDATAU2_DQ	R1118 8	7	22OHM DDR3_AMDATAU2_DQ
DDR3_A_DQML_DQ	R1119 2	1	22OHM DDR3_ADQML_DQ
DDR3_A_MDATAL3_DQ	R1119 4	3	22OHM DDR3_AMDATAL3_DQ
DDR3_A_MDATAL1_DQ	R1119 6	5	22OHM DDR3_AMDATAL1_DQ
DDR3_A_MDATAL5_DQ	R1119 8	7	22OHM DDR3_AMDATAL5_DQ
DDR3_A_MDATAL7_DQ	R1120 2	1	22OHM DDR3_AMDATAL7_DQ
DDR3_A_CKE_ADDR	R1120 4	3	22OHM DDR3_ACKE_ADDR
DDR3_A_M+_CLK	R1120 6	5	22OHM DDR3_AM+_CLK
DDR3_A_M-_CLK	R1120 8	7	22OHM DDR3_AM-_CLK
	R1121 2	1	22OHM
DDR3_A_MADR0_ADDR	R1121 4	3	22OHM DDR3_AMADR0_ADDR
DDR3_A_MADR2_ADDR	R1121 6	5	22OHM DDR3_AMADR2_ADDR
DDR3_A_MADR9_ADDR	R1121 8	7	22OHM DDR3_AMADR9_ADDR
DDR3_A_MADR13_ADDR	R1122 2	1	22OHM DDR3_AMADR13_ADDR
DDR3_A_MADR5_ADDR	R1122 4	3	22OHM DDR3_AMADR5_ADDR
DDR3_A_MADR7_ADDR	R1122 6	5	22OHM DDR3_AMADR7_ADDR
DDR3_A_RESET_ADDR	R1122 8	7	22OHM DDR3_ARESET_ADDR
DDR3_A_MADR3_ADDR	R1123 2	1	22OHM DDR3_AMADR3_ADDR
DDR3_A_BA2_ADDR	R1123 4	3	22OHM DDR3_ABA2_ADDR
DDR3_A_CASZ_ADDR	R1123 6	5	22OHM DDR3_ACASZ_ADDR
DDR3_A_BA0_ADDR	R1123 8	7	22OHM DDR3_ABA0_ADDR
DDR3_A_RASZ_ADDR	R1124 2	1	22OHM DDR3_ARASZ_ADDR
DDR3_A_ODT_ADDR	R1124 4	3	22OHM DDR3_ADDT_ADDR
DDR3_A_WEZ_ADDR	R1124 6	5	22OHM DDR3_AWEZ_ADDR
DDR3_A_MADR10_ADDR	R1124 8	7	22OHM DDR3_AMADR10_ADDR
DDR3_A_MADR12_ADDR	R1125 2	1	22OHM DDR3_AMADR12_ADDR
DDR3_A_BA1_ADDR	R1125 4	3	22OHM DDR3_ABA1_ADDR
DDR3_A_MADR4_ADDR	R1125 6	5	22OHM DDR3_AMADR4_ADDR
DDR3_A_MADR1_ADDR	R1125 8	7	22OHM DDR3_AMADR1_ADDR
DDR3_A_MADR6_ADDR	R1126 2	1	22OHM DDR3_AMADR6_ADDR
DDR3_A_MADR8_ADDR	R1126 4	3	22OHM DDR3_AMADR8_ADDR
DDR3_A_MADR11_ADDR	R1126 6	5	22OHM DDR3_AMADR11_ADDR
DDR3_A_MADR14_ADDR	R1126 8	7	22OHM DDR3_AMADR14_ADDR
DDR3_A_MDATAL4_DQ	R1128		22OHM DDR3_AMDATAL4_DQ

B1.5V_DDR_PW

C1111 22UF 6.3V; C1113 22UF 6.3V; C1115 22UF 6.3V; C1121 22UF 6.3V; C1125 1000NF 10V; C1123 1000NF 10V; C1145 1000NF 10V; C1147 1000NF 10V; C1149 1000NF 10V; C1151 1000NF 10V; C1153 1000NF 10V; C1155 1000NF 10V; C1157 1000NF 10V; C1159 1000NF 10V; C1161 1000NF 10V; C1163 1000NF 10V; C1165 1000NF 10V; C1167 1000NF 10V; C1119 1000NF 10V; C1122 1000NF 10V; DGND

CLOSE TO IC1101

DDR3_B 256M_MIU1

B1.5V_DDR_PW

MT41J128M16HA-15E
IC1102

B1.5V_DDR_PW: R1108 1KOHM 5%; C1104 1NF; C1106 10NF 10V; R1109 1KOHM 5%; DGND

B1.5V_DDR_PW: R1114 1KOHM 5%; R1115 1KOHM 1%; C1108 10NF 10V; C1110 1NF; DGND

VREFCA_B — VREFDQ_B

DDR3_BMADR0_ADDR	N3	E3	DDR3_BMDATAL0_DQ
DDR3_BMADR1_ADDR	P7	F7	DDR3_BMDATAL1_DQ
DDR3_BMADR2_ADDR	P3	F2	DDR3_BMDATAL2_DQ
DDR3_BMADR3_ADDR	N2	F8	DDR3_BMDATAL3_DQ
DDR3_BMADR4_ADDR	P8	H3	DDR3_BMDATAL4_DQ
DDR3_BMADR5_ADDR	P2	H8	DDR3_BMDATAL5_DQ
DDR3_BMADR6_ADDR	R8	G2	DDR3_BMDATAL6_DQ
DDR3_BMADR7_ADDR	R2	H7	DDR3_BMDATAL7_DQ
DDR3_BMADR8_ADDR	T8	D7	DDR3_BMDATAU0_DQ
DDR3_BMADR9_ADDR	R3	C3	DDR3_BMDATAU1_DQ
DDR3_BMADR10_ADDR	L7	C8	DDR3_BMDATAU2_DQ
DDR3_BMADR11_ADDR	R7	C2	DDR3_BMDATAU3_DQ
DDR3_BMADR12_ADDR	N7	A7	DDR3_BMDATAU4_DQ
DDR3_BMADR13_ADDR	T3	A2	DDR3_BMDATAU5_DQ
DDR3_BMADR14_ADDR	T7	B8	DDR3_BMDATAU6_DQ
	M7	A3	DDR3_BMDATAU7_DQ
DDR3_BDQSL+_DQS	F3	B1	
DDR3_BDQSL-_DQS	G3	B9	
DDR3_BDQSU+_DQS	C7	D1	
DDR3_BDQSU-_DQS	B7	D8	
DDR3_BDQML_DQ	E7	E2	
DDR3_BDQMU_DQ	D3	E8	
DDR3_BBA0_ADDR	M2	F9	
DDR3_BBA1_ADDR	N8	G1	
DDR3_BBA2_ADDR	M3	G9	
DDR3_BODT_ADDR	K1		
	L8		
R1111 240OHM 1%			
DDR3_BM+_CLK	J7	A9	
DDR3_BM-_CLK	K7	B3	
DDR3_BCKE_ADDR	K9	E1	
	L2	G8	
DDR3_BCASZ_ADDR	K3	J2	
DDR3_BRASZ_ADDR	J3	J8	
DDR3_BWEZ_ADDR	L3	M1	
DDR3_BRESET_ADDR	T2	M9	
	J1	P1	
	J9	P9	
	L1	T1	
	L9	T9	

DGND

DDR3_B_MDATAL6_DQ	R1127 2	1	22OHM DDR3_BMDATAL6_DQ
DDR3_B_MDATAL2_DQ	R1127 4	3	22OHM DDR3_BMDATAL2_DQ
DDR3_B_MDATAL0_DQ	R1127 6	5	22OHM DDR3_BMDATAL0_DQ
DDR3_B_DQMU_DQ	R1127 8	7	22OHM DDR3_BDQMU_DQ
DDR3_B_MDATAU5_DQ	R1129 2	1	22OHM DDR3_BMDATAU5_DQ
DDR3_B_MDATAU3_DQ	R1129 4	3	22OHM DDR3_BMDATAU3_DQ
DDR3_B_MDATAU7_DQ	R1129 6	5	22OHM DDR3_BMDATAU7_DQ
DDR3_B_MDATAU1_DQ	R1129 8	7	22OHM DDR3_BMDATAU1_DQ
DDR3_B_DQSL+_DQS	R1130 2	1	22OHM DDR3_BDQSL+_DQS
DDR3_B_DQSL-_DQS	R1130 4	3	22OHM DDR3_BDQSL-_DQS
DDR3_B_DQSU+_DQS	R1130 6	5	22OHM DDR3_BDQSU+_DQS
DDR3_B_DQSU-_DQS	R1130 8	7	22OHM DDR3_BDQSU-_DQS
DDR3_B_MDATAU4_DQ	R1131 2	1	22OHM DDR3_BMDATAU4_DQ
DDR3_B_MDATAU0_DQ	R1131 4	3	22OHM DDR3_BMDATAU0_DQ
DDR3_B_MDATAU6_DQ	R1131 6	5	22OHM DDR3_BMDATAU6_DQ
DDR3_B_MDATAU2_DQ	R1131 8	7	22OHM DDR3_BMDATAU2_DQ
DDR3_B_DQML_DQ	R1132 2	1	22OHM DDR3_BDQML_DQ
DDR3_B_MDATAL3_DQ	R1132 4	3	22OHM DDR3_BMDATAL3_DQ
DDR3_B_MDATAL1_DQ	R1132 6	5	22OHM DDR3_BMDATAL1_DQ
DDR3_B_MDATAL5_DQ	R1132 8	7	22OHM DDR3_BMDATAL5_DQ
DDR3_B_MDATAL7_DQ	R1133 2	1	22OHM DDR3_BMDATAL7_DQ
DDR3_B_CKE_ADDR	R1133 4	3	22OHM DDR3_BCKE_ADDR
DDR3_B_M+_CLK	R1133 6	5	22OHM DDR3_BM+_CLK
DDR3_B_M-_CLK	R1133 8	7	22OHM DDR3_BM-_CLK
	R1134 2	1	22OHM
DDR3_B_MADR0_ADDR	R1134 4	3	22OHM DDR3_BMADR0_ADDR
DDR3_B_MADR2_ADDR	R1134 6	5	22OHM DDR3_BMADR2_ADDR
DDR3_B_MADR9_ADDR	R1134 8	7	22OHM DDR3_BMADR9_ADDR
DDR3_B_MADR13_ADDR	R1135 2	1	22OHM DDR3_BMADR13_ADDR
DDR3_B_MADR5_ADDR	R1135 4	3	22OHM DDR3_BMADR5_ADDR
DDR3_B_MADR7_ADDR	R1135 6	5	22OHM DDR3_BMADR7_ADDR
DDR3_B_RESET_ADDR	R1135 8	7	22OHM DDR3_BRESET_ADDR
DDR3_B_MADR3_ADDR	R1136 2	1	22OHM DDR3_BMADR3_ADDR
DDR3_B_BA2_ADDR	R1136 4	3	22OHM DDR3_BBA2_ADDR
DDR3_B_CASZ_ADDR	R1136 6	5	22OHM DDR3_BCASZ_ADDR
DDR3_B_BA0_ADDR	R1136 8	7	22OHM DDR3_BBA0_ADDR
DDR3_B_RASZ_ADDR	R1137 2	1	22OHM DDR3_BRASZ_ADDR
DDR3_B_ODT_ADDR	R1137 4	3	22OHM DDR3_BODT_ADDR
DDR3_B_WEZ_ADDR	R1137 6	5	22OHM DDR3_BWEZ_ADDR
DDR3_B_MADR10_ADDR	R1137 8	7	22OHM DDR3_BMADR10_ADDR
DDR3_B_BA1_ADDR	R1138 2	1	22OHM DDR3_BBA1_ADDR
DDR3_B_MADR12_ADDR	R1138 4	3	22OHM DDR3_BMADR12_ADDR
DDR3_B_MADR4_ADDR	R1138 6	5	22OHM DDR3_BMADR4_ADDR
DDR3_B_MADR1_ADDR	R1138 8	7	22OHM DDR3_BMADR1_ADDR
DDR3_B_MADR6_ADDR	R1139 2	1	22OHM DDR3_BMADR6_ADDR
DDR3_B_MADR8_ADDR	R1139 4	3	22OHM DDR3_BMADR8_ADDR
DDR3_B_MADR11_ADDR	R1139 6	5	22OHM DDR3_BMADR11_ADDR
DDR3_B_MADR14_ADDR	R1139 8	7	22OHM DDR3_BMADR14_ADDR
DDR3_B_MDATAL4_DQ	R1140		22OHM DDR3_BMDATAL4_DQ

B1.5V_DDR_PW

C1112 22UF 6.3V; C1114 22UF 6.3V; C1116 22UF 6.3V; C1126 1000NF 10V; C1124 1000NF 10V; C1142 1000NF 10V; C1144 1000NF 10V; C1146 1000NF 10V; C1148 1000NF 10V; C1150 1000NF 10V; C1152 1000NF 10V; C1154 1000NF 10V; C1156 1000NF 10V; C1158 1000NF 10V; C1160 1000NF 10V; C1162 1000NF 10V; C1120 1000NF 10V; C1121 1000NF 10V; DGND

CLOSE TO IC1102

FOR VOLTAGE MODE

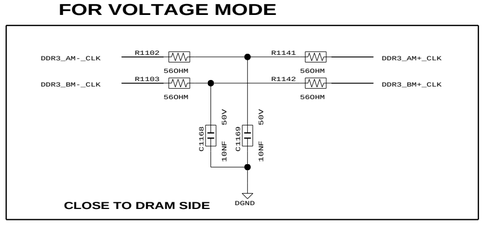

CLOSE TO DRAM SIDE

PROJECT NAME			A2	DRAWN BY
high_x6_dvb_led_1st				Unknown
				CHECKED BY Unknown
SAMSUNG	DEV.STEP Unknown	REV. 1.0		APPROVED BY Unknown
LAST EDITED TIME Fri Jan 07 12:53:03 2011				TOTAL PAGE NO. 11 OF 18

D:/atdm/high_x6_dvb_led_1st\high_x6_dvb_led_1st.cpm

SAMSUNG PROPRIETARY
THIS DOCUMENT CONTAINS CONFIDENTIAL
PROPRIETARY INFORMATION THAT IS
SAMSUNG ELECTRONIS CO'S PROPRIETARY.
DO NOT DISCLOSE TO OR DUPLICATE FOR OTHERS
EXCEPT AS AUTHORIZED BY SAMSUNG.
Comply with the threshold of substances
which are specified in 0QA-2049

BLOCK NAME	BLK PAGE NO.
high_x6_dvb_led_1st	12 OF 18

RESET

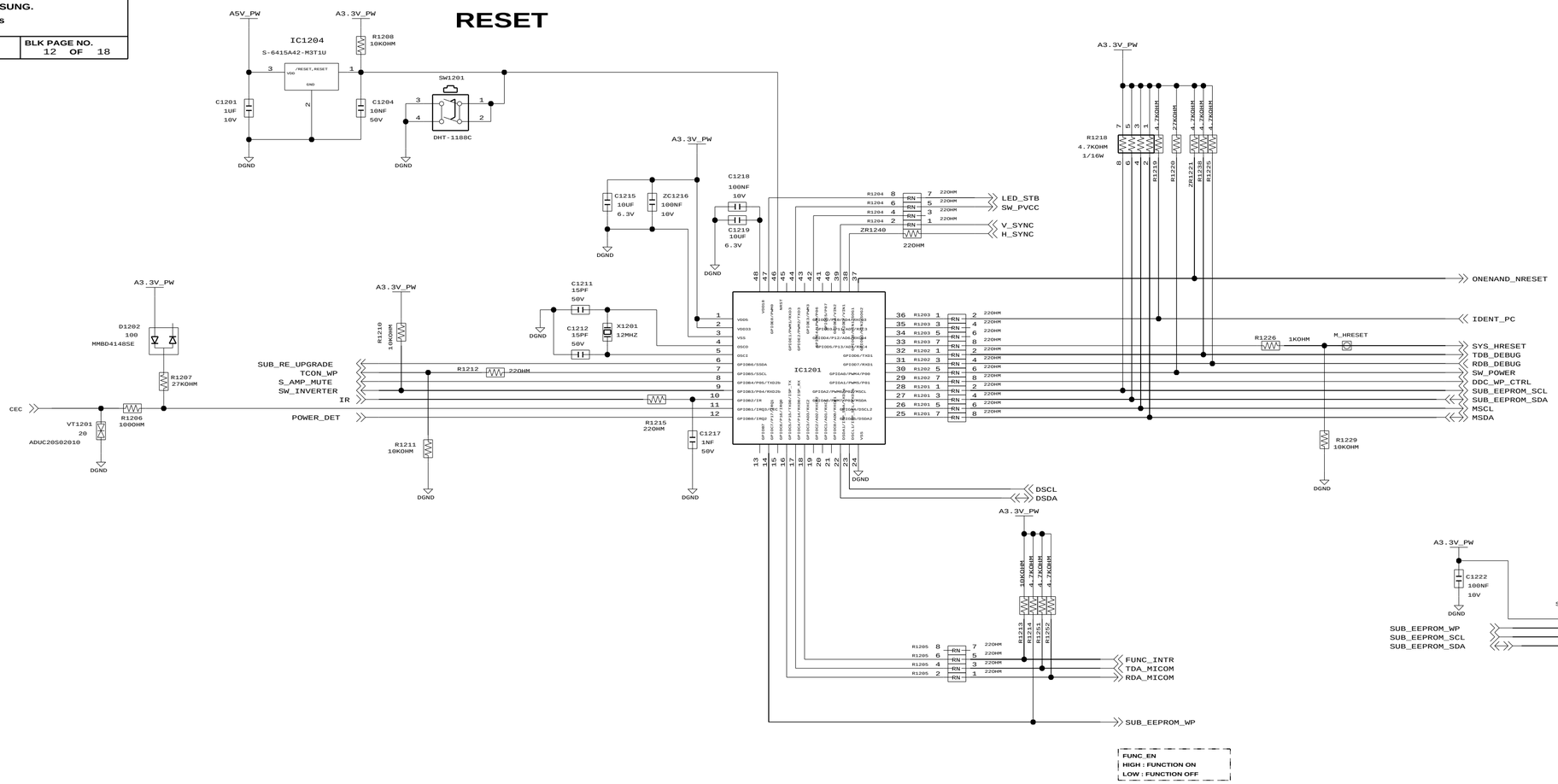

FUNC_EN
HIGH : FUNCTION ON
LOW : FUNCTION OFF

FUNCTION

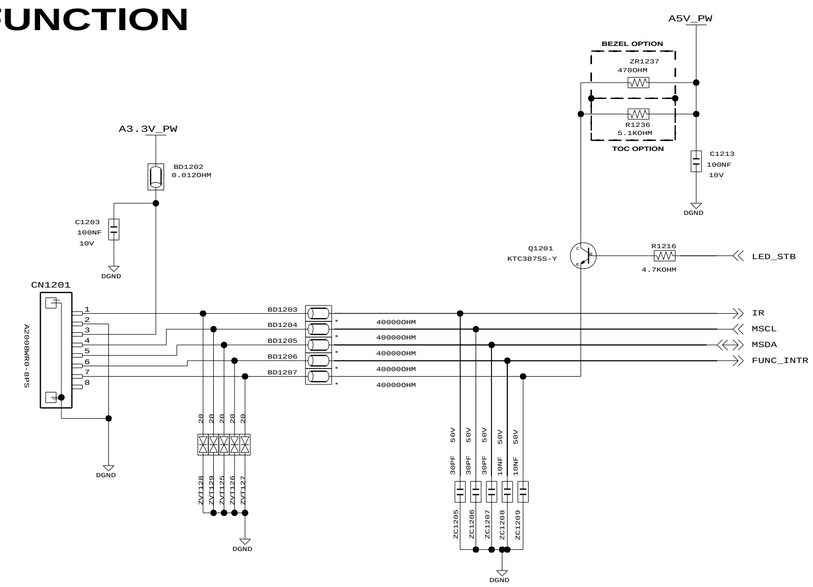

DEBUG PORT

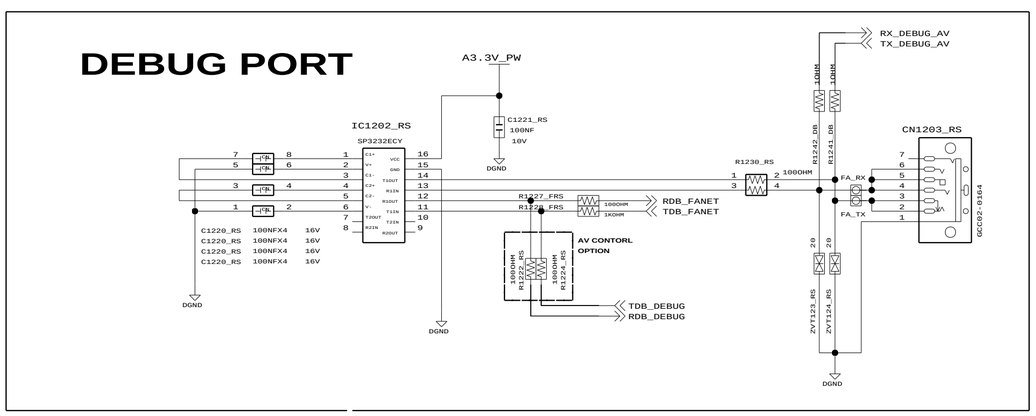

PROJECT NAME			A2	DRAWN BY
high_x6_dvb_led_1st				Unknown
				CHECKED BY Unknown
SAMSUNG	DEV.STEP Unknown	REV. 1.0		APPROVED BY Unknown
LAST EDITED TIME Fri Jan 07 12:52:53 2011				TOTAL PAGE NO. 12 OF 18

D:/atdm/high_x6_dvb_led_1st\high_x6_dvb_led_1st.cpm

SAMSUNG PROPRIETARY
THIS DOCUMENT CONTAINS CONFIDENTIAL
PROPRIETARY INFORMATION THAT IS
SAMSUNG ELECTRONIS CO'S PROPRIETARY.
DO NOT DISCLOSE TO OR DUPLICATE FOR OTHERS
EXCEPT AS AUTHORIZED BY SAMSUNG.

Comply with the threshold of substances
which are specified in 0QA-2049

BLOCK NAME	BLK PAGE NO.
high_x6_dvb_led_1st	13 OF 18

ONENAND FLASH

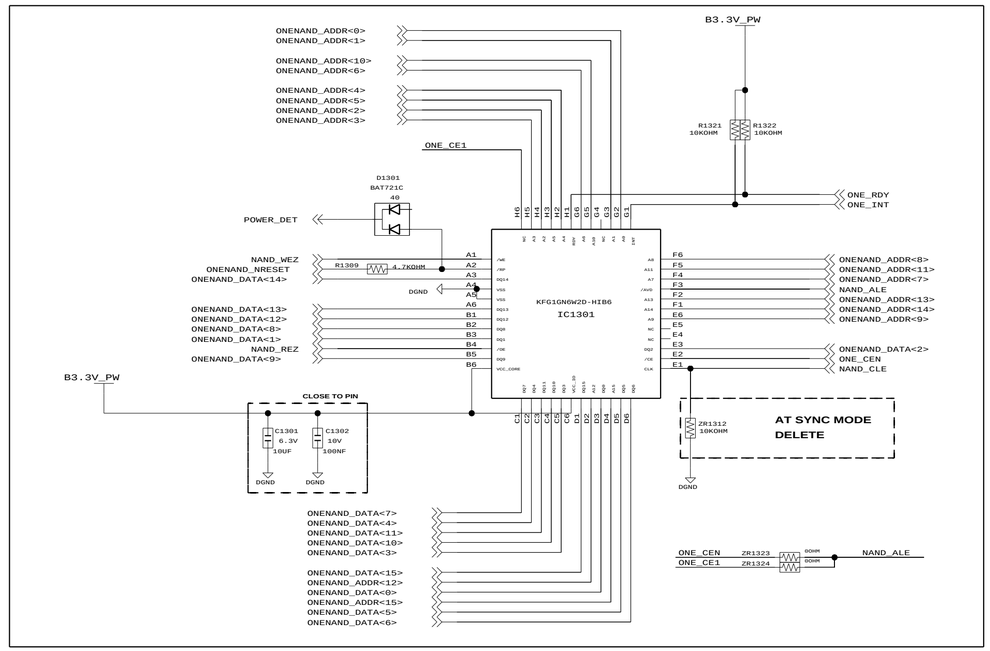

CI

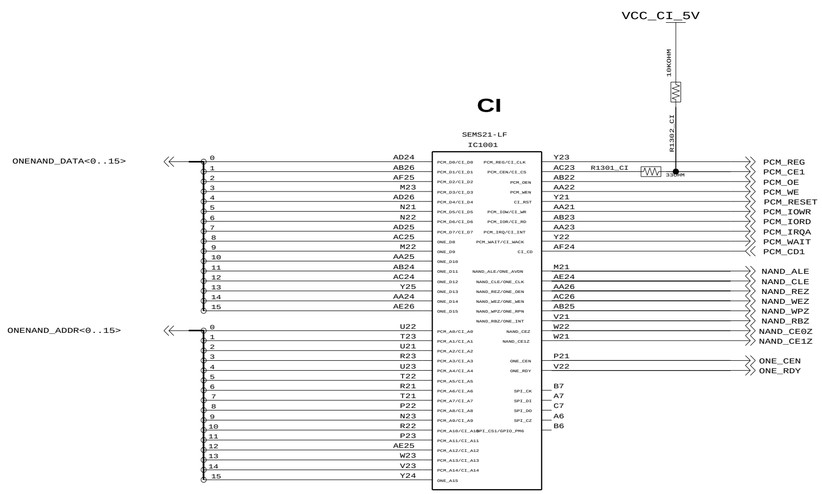

MLC NAND FLASH (USE INTERNET TV)

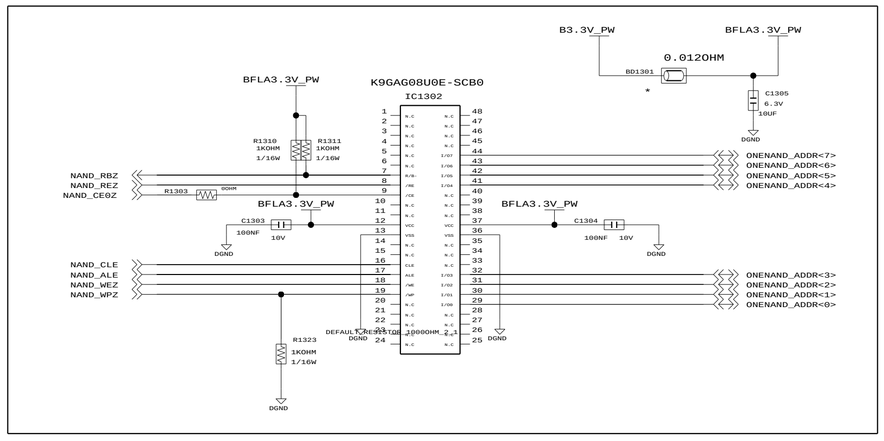

PROJECT NAME			A2	DRAWN BY
high_x6_dvb_led_1st				Unknown
				CHECKED BY Unknown
SAMSUNG	DEV.STEP Unknown	REV. 1.0		APPROVED BY Unknown
LAST EDITED TIME Fri Jan 07 12:52:48 2011				TOTAL PAGE NO. 13 OF 18

SAMSUNG PROPRIETARY

THIS DOCUMENT CONTAINS CONFIDENTIAL
PROPRIETARY INFORMATION THAT IS
SAMSUNG ELECTRONIS CO'S PROPRIETARY.
DO NOT DISCLOSE TO OR DUPLICATE FOR OTHERS
EXCEPT AS AUTHORIZED BY SAMSUNG.

Comply with the threshold of substances
which are specified in 0QA-2049

BLOCK NAME	BLK PAGE NO.
high_x6_dvb_led_1st	14 OF 18

AUDIO

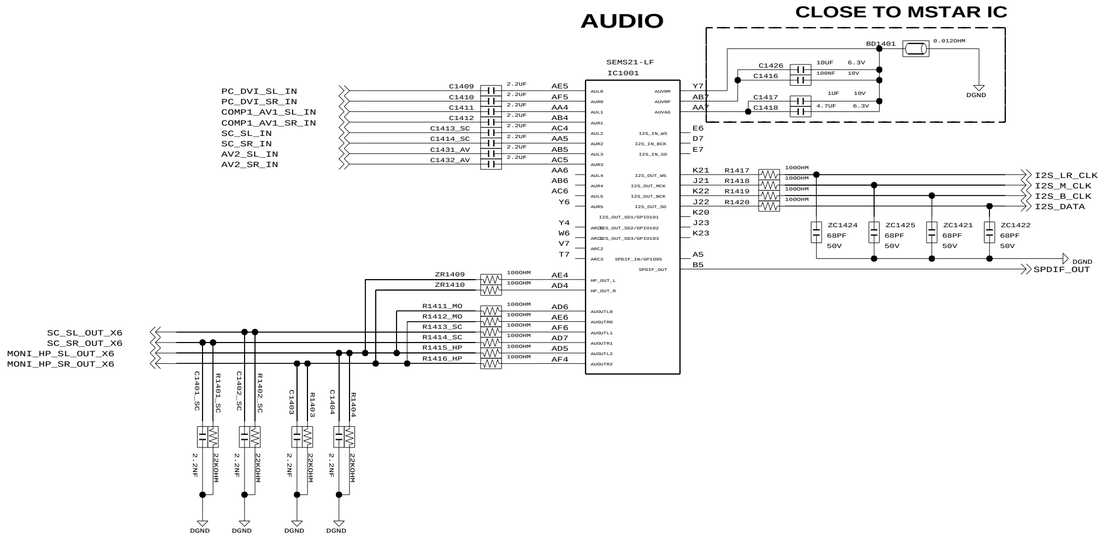

BOOTSTRAP (VALUE : 11101)

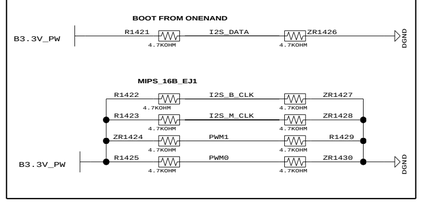

SAMSUNG PROPRIETARY
THIS DOCUMENT CONTAINS CONFIDENTIAL
PROPRIETARY INFORMATION THAT IS
SAMSUNG ELECTRONIS CO'S PROPRIETARY.
DO NOT DISCLOSE TO OR DUPLICATE FOR OTHERS
EXCEPT AS AUTHORIZED BY SAMSUNG.
Comply with the threshold of substances
which are specified in 0QA-2049

LVDS NEED INVERT.

TO SMOOTH SUBSTRATE AND PCB LAYOUT.

FHD PANEL

IC LVA0 - ODD TX4
IC LVA1 - ODD TX3
IC LVA2 - ODD TXCLK
IC LVACLK - ODD TX2
IC LVA3 - ODD TX1
IC LVA4 - ODD TX0

IC LVB0 - EVEN TX4
IC LVB1 - EVEN TX3
IC LVB2 - EVEN TXCLK
IC LVBCLK - EVEN TX2
IC LVB3 - EVEN TX1
IC LVB4 - EVEN TX0

HD PANEL

IC LVA1 - ODD TX3
IC LVA2 - ODD TXCLK
IC LVACLK - ODD TX2
IC LVA3 - ODD TX1
IC LVA4 - ODD TX0

LVDS

ETHERNET

USB

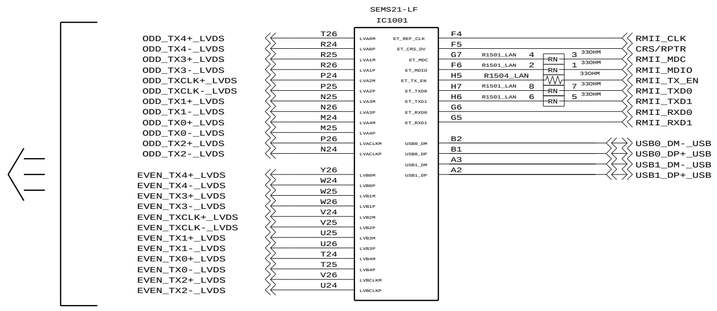

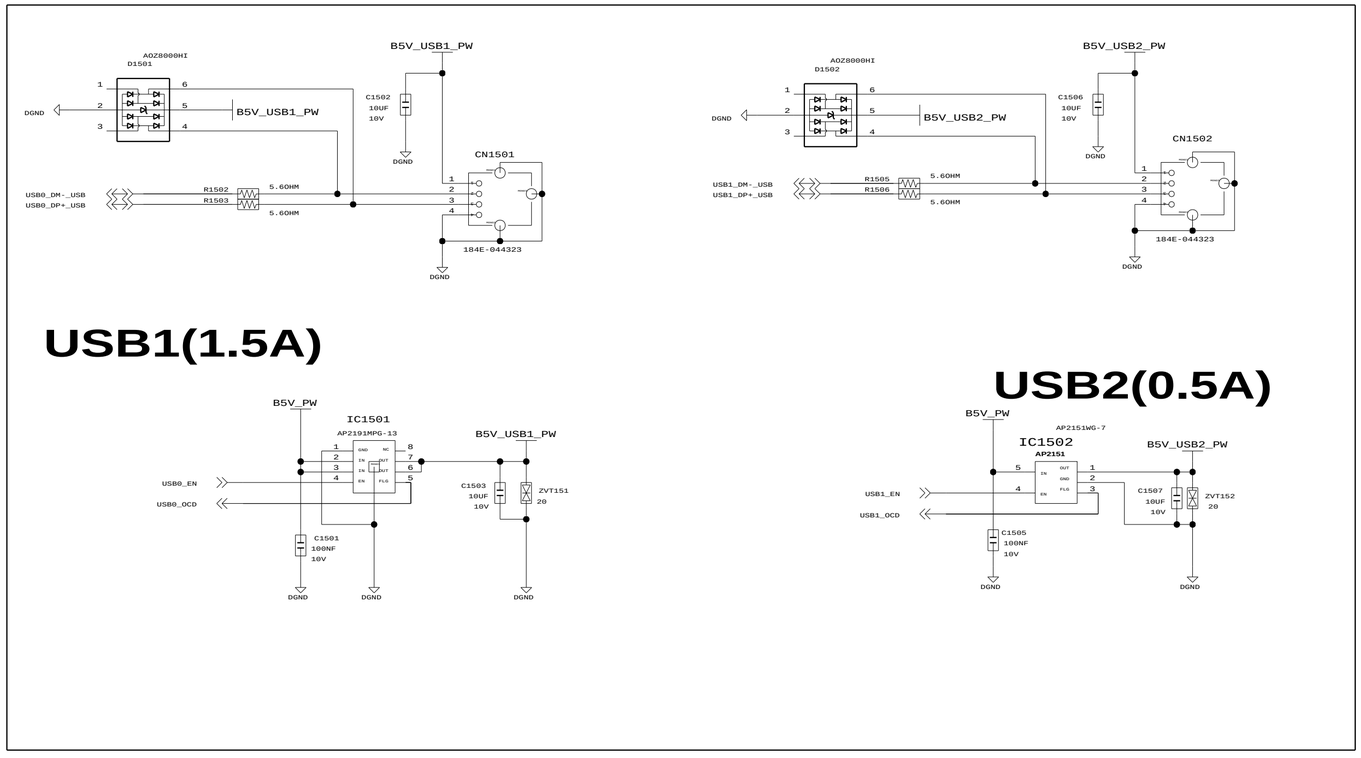

PROJECT NAME: high_x6_dvb_led_1st		A2	DRAWN BY: Unknown
			CHECKED BY: Unknown
SAMSUNG	DEV.STEP: Unknown	REV.: 1.0	APPROVED BY: Unknown
LAST EDITED TIME: Fri Jan 07 12:52:49 2011			TOTAL PAGE NO.: 15 OF 18

SAMSUNG PROPRIETARY

THIS DOCUMENT CONTAINS CONFIDENTIAL
PROPRIETARY INFORMATION THAT IS
SAMSUNG ELECTRONIS CO'S PROPRIETARY.
DO NOT DISCLOSE TO OR DUPLICATE FOR OTHERS
EXCEPT AS AUTHORIZED BY SAMSUNG.

Comply with the threshold of substances
which are specified in 0QA-2049

BLOCK NAME	BLK PAGE NO.
high_x6_dvb_led_1st	16 OF 18

LVDS

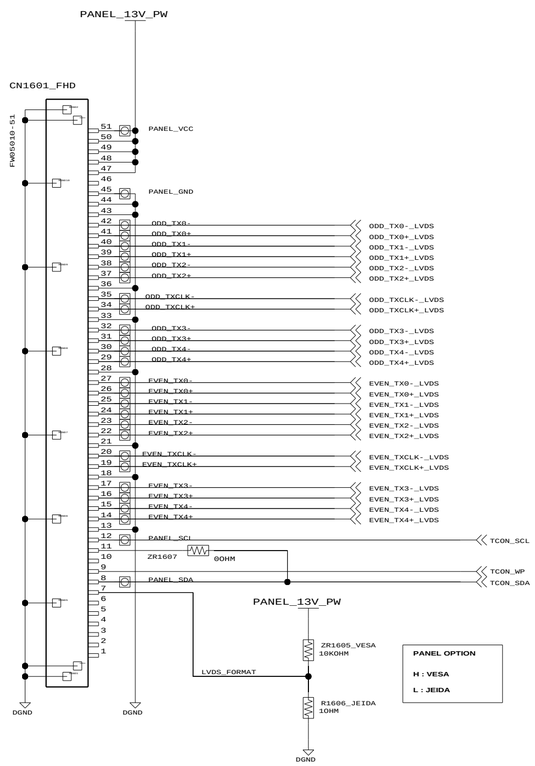

DIMMING OUT

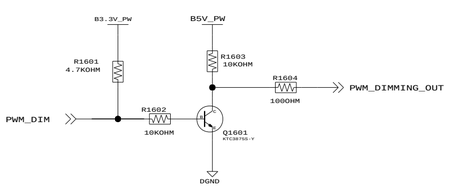

PROJECT NAME			A2	DRAWN BY
high_x6_dvb_led_1st				Unknown
				CHECKED BY Unknown
SAMSUNG	DEV.STEP Unknown	REV. 1.0		APPROVED BY Unknown
LAST EDITED TIME Fri Jan 07 12:53:01 2011				TOTAL PAGE NO. 16 OF 18

SAMSUNG PROPRIETARY
THIS DOCUMENT CONTAINS CONFIDENTIAL
PROPRIETARY INFORMATION THAT IS
SAMSUNG ELECTRONIS CO'S PROPRIETARY.
DO NOT DISCLOSE TO OR DUPLICATE FOR OTHERS
EXCEPT AS AUTHORIZED BY SAMSUNG.
Comply with the threshold of substances
which are specified in 0QA-2049

BLOCK NAME	BLK PAGE NO.
high_x6_dvb_led_1st	17 OF 18

PHY CHIP MUST BE CLOSE TO LAN CONNECTOR

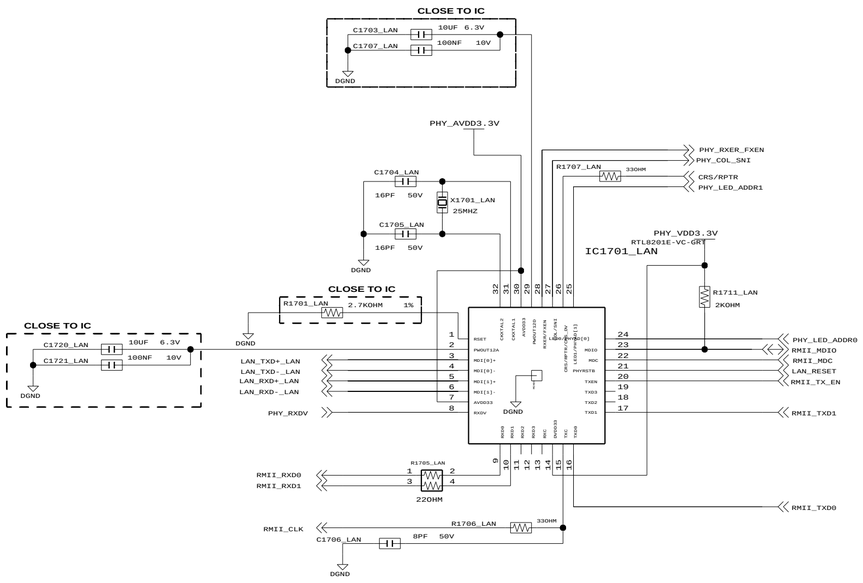

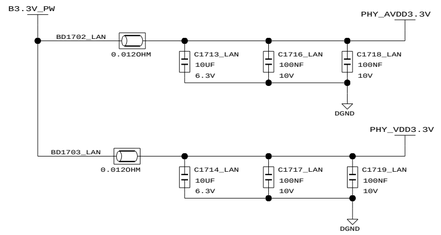

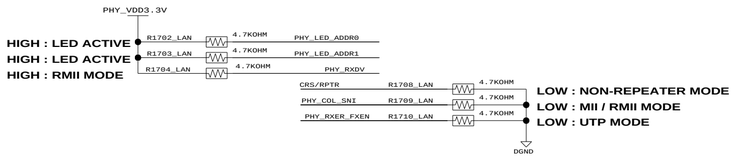

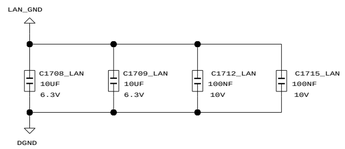

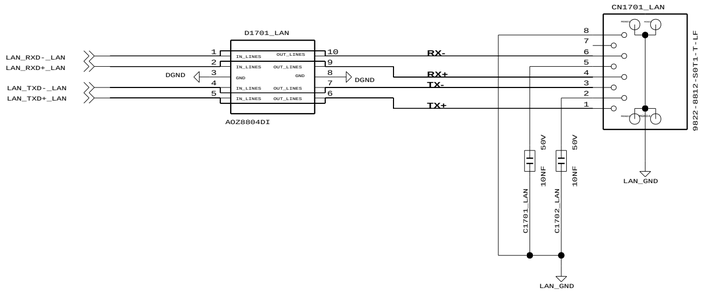

PROJECT NAME			A2	DRAWN BY
high_x6_dvb_led_1st				Unknown
				CHECKED BY Unknown
SAMSUNG	DEV.STEP Unknown	REV. 1.0		APPROVED BY Unknown
LAST EDITED TIME Fri Jan 07 12:52:55 2011				TOTAL PAGE NO. 17 OF 18

SAMSUNG PROPRIETARY
THIS DOCUMENT CONTAINS CONFIDENTIAL
PROPRIETARY INFORMATION THAT IS
SAMSUNG ELECTRONIS CO'S PROPRIETARY.
DO NOT DISCLOSE TO OR DUPLICATE FOR OTHERS
EXCEPT AS AUTHORIZED BY SAMSUNG.
Comply with the threshold of substances
which are specified in 0QA-2049

BLOCK NAME	BLK PAGE NO.
high_x6_dvb_led_1st	18 OF 18

PCMCIA

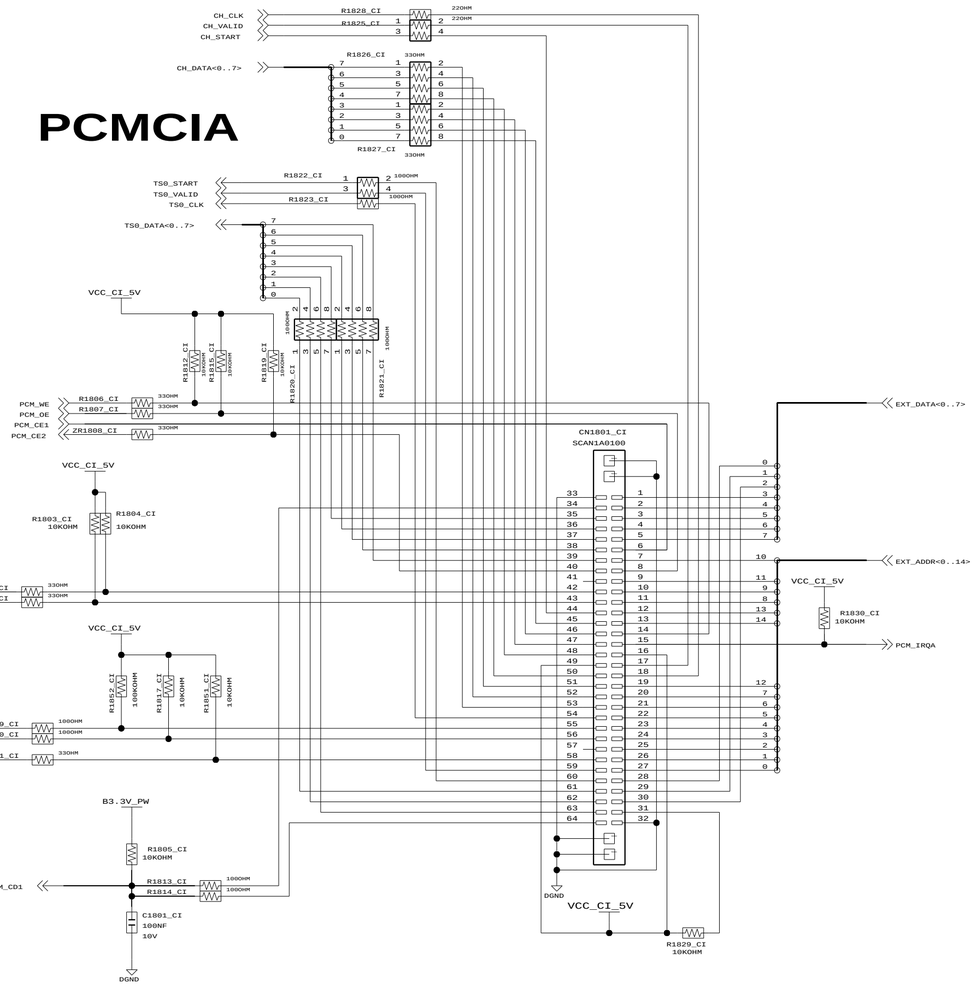

CI ADDRESS

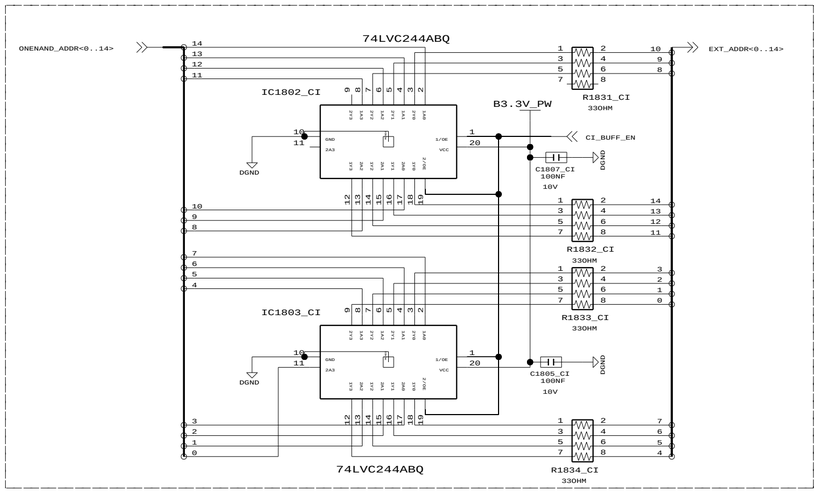

CI DATA

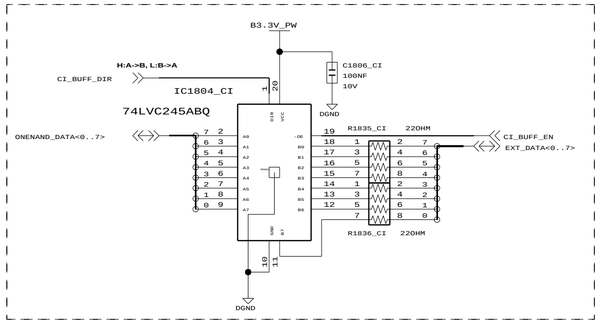

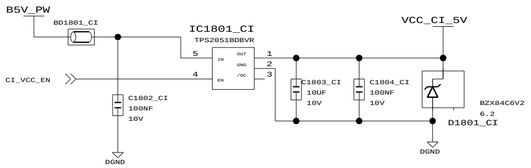

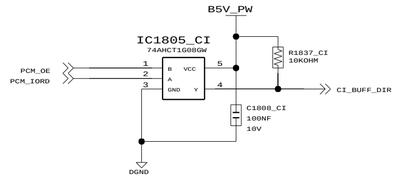

PROJECT NAME	A2	DRAWN BY
high_x6_dvb_led_1st		Unknown
		CHECKED BY: Unknown
SAMSUNG	DEV.STEP: Unknown / REV.: 1.0	APPROVED BY: Unknown
LAST EDITED TIME: Fri Jan 07 12:52:56 2011		TOTAL PAGE NO.: 18 OF 18

D:/atdm/high_x6_dvb_led_1st\high_x6_dvb_led_1st.cpm