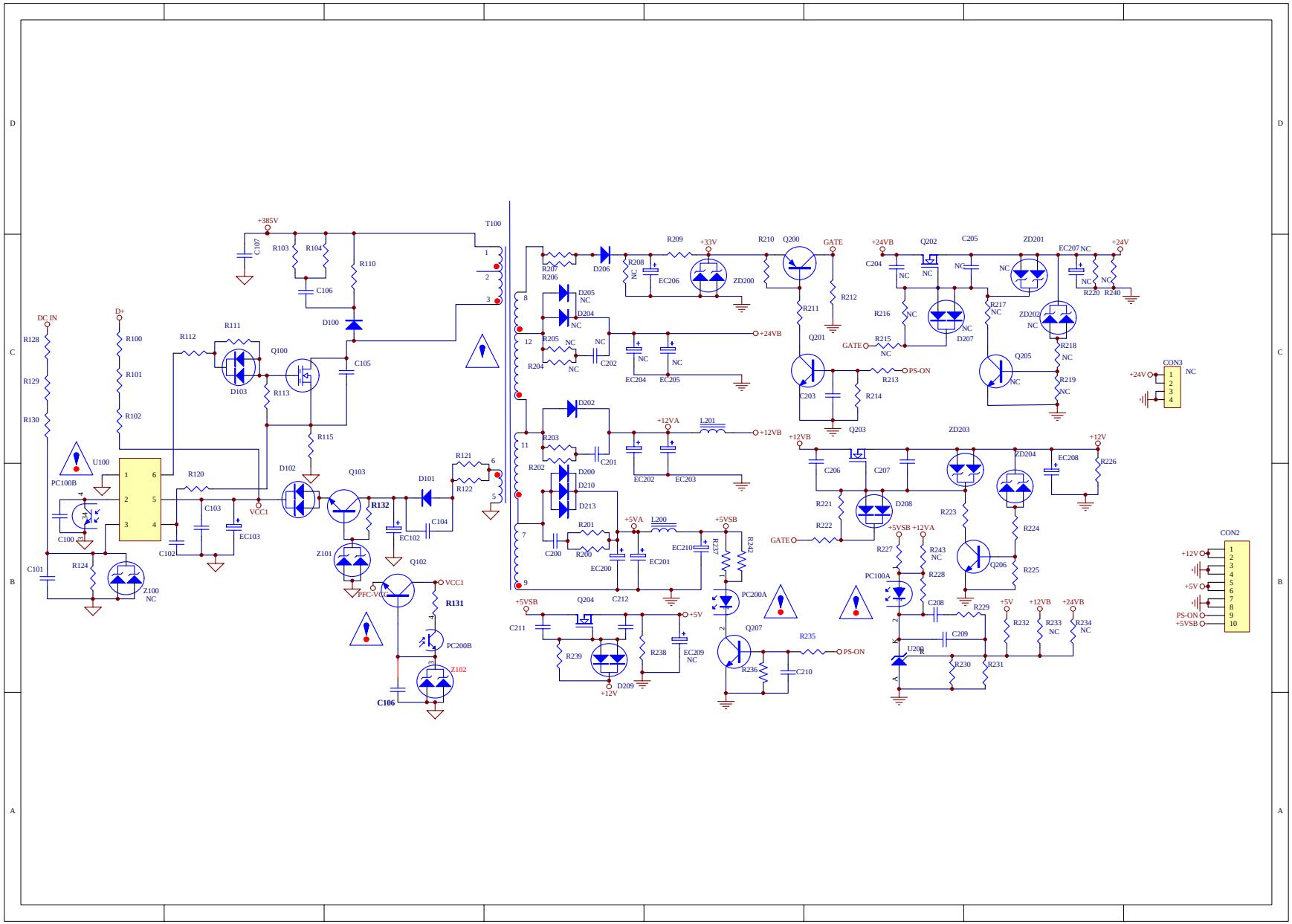

T100
+385V
C107
R103
R104
R110
C106
D100
DC IN
D+
R128
R129
R130
R100
R101
R102
R112
R111
Q100
D103
R113
C105
R115
U100
PC100B
R120
C103
VCC1
EC103
C100
C101
R124
Z100
NC
C102
D102
Q103
R132
D101
R121
R122
C104
EC102
Z101
Q102
PFC-VCC
VCC1
R131
PC200B
Z102
C106
R207
R206
D206
R208
NC
EC206
R209
+33V
ZD200
R210
Q200
GATE
R212
R211
D205
NC
D204
NC
R205
NC
R204
NC
C202
EC204
EC205
+24VB
Q201
C203
R214
R213
PS-ON
Q203
D202
R203
C201
+12VA
L201
+12VB
EC202
EC203
R202
D200
D210
D213
R201
C200
R200
EC200
EC201
+5VA
L200
EC210
+5VSB
R237
R242
PC200A
Q204
C212
+5V
C211
R239
R238
EC209
NC
D209
+12V
Q207
R235
PS-ON
R236
C210
+24VB
Q202
C205
ZD201
EC207
NC
+24V
C204
NC
NC
NC
NC
NC
R220
R240
R216
NC
R217
NC
ZD202
NC
D207
GATE
R215
NC
R218
NC
Q205
NC
R219
NC
CON3
+24V
NC
+12VB
ZD203
+12V
C206
C207
ZD204
EC208
R226
R221
D208
R223
R222
GATE
+5VSB
+12VA
R227
R243
NC
R224
Q206
R225
PC100A
R228
C208
R229
+5V
+12VB
+24VB
R232
R233
NC
R234
NC
C209
U200
R230
R231
CON2
+12V
+5V
PS-ON
+5VSB

# AY156D-4SF19 维修指南

1. 电源板工作说明

启动时，由 90V-264V 交流电压输入，首先将待机电源启动，5VSB 输出给 CPU 供电，由 CPU 根据整机设定情况发出 PS /ON 开机指令给电源电路，通过反馈回路将主电路接通，90V-264V 交流电压通过整流经大电解电容储能虑波后输出，经变压器转换输出 24V，12V，5V。与此同时，PFC 电路开启，PFC 电路将经过整流后的输入电压（大电解电容 EC100、EC101 的电压）升至 385Vdc,并保持在 385Vdc.LED 驱动电路使用 LLC 谐振半桥架构，经过 385V DC/DC 转换输出 136Vdc（LED 灯点亮电压为 136Vdc）。主板将根据情况输出 SW 信号和 PWM 调光信号，电源接到这两个信号后，LED 驱动开始工作，背光点亮。

电源原理图如下：

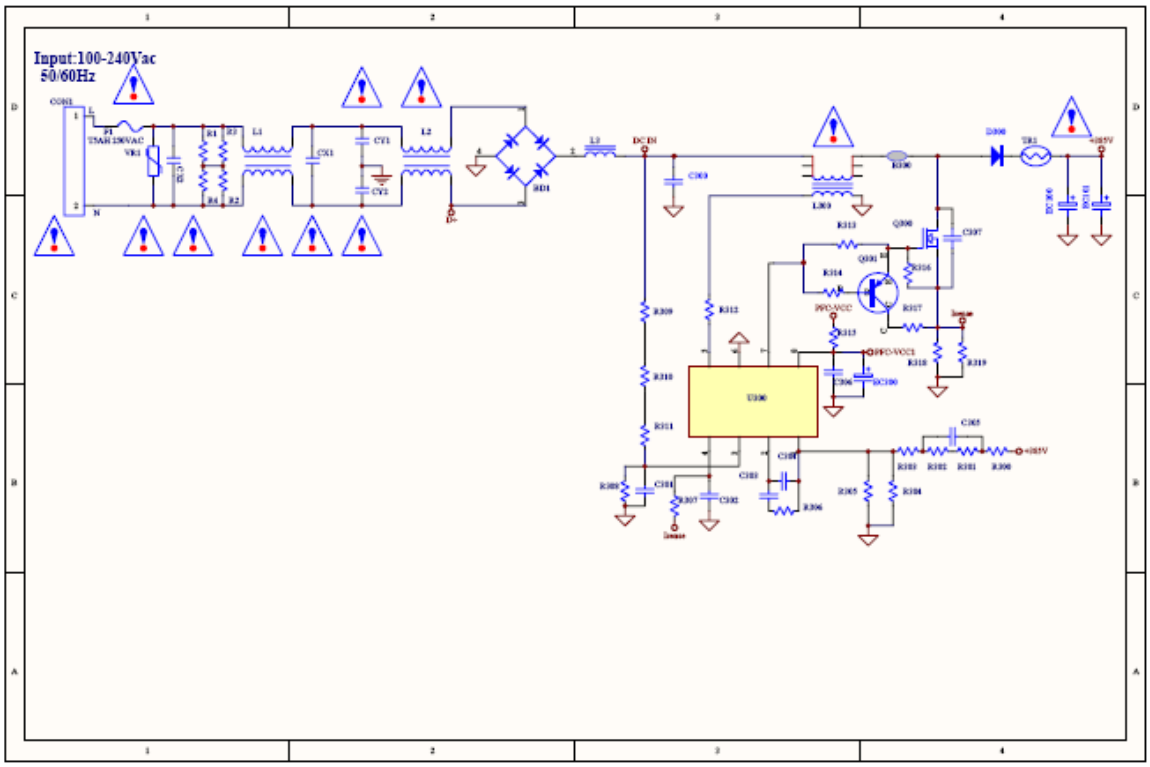

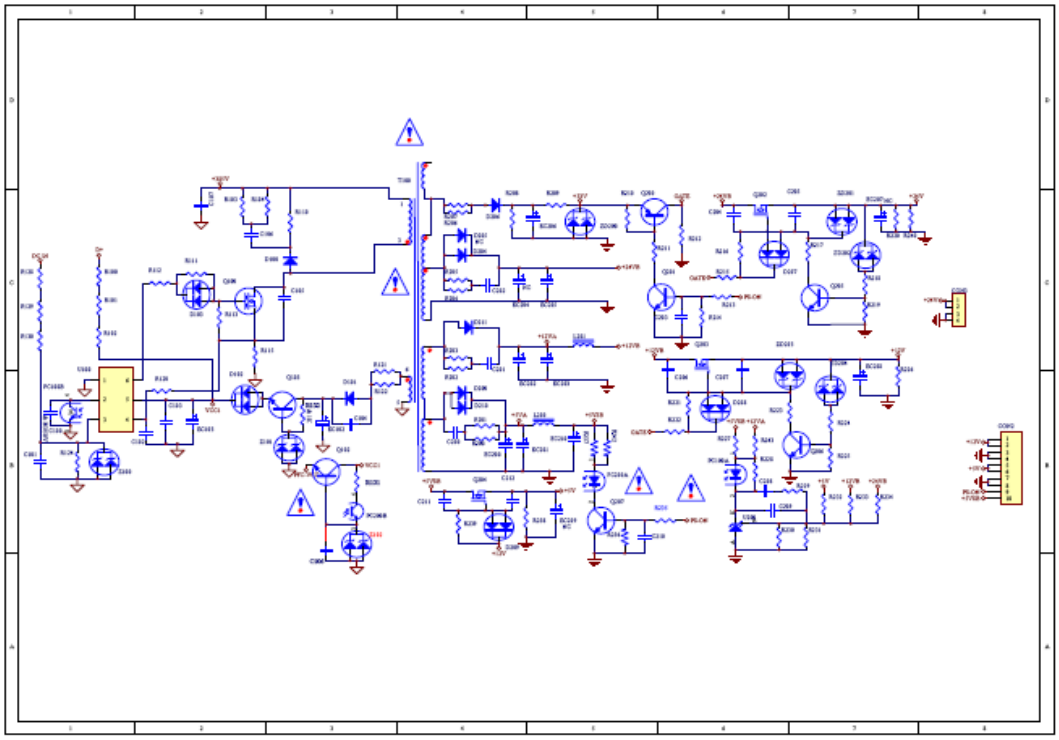

电源部分原理图

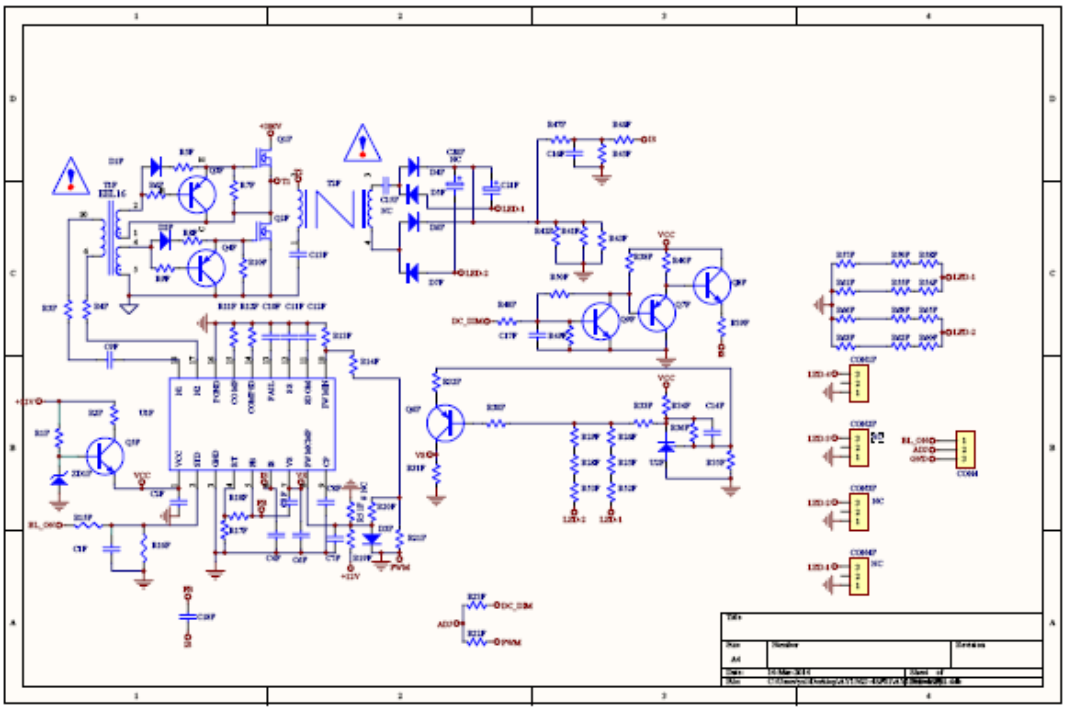

LED 驱动部分原理图

2．各部分分解说明

2.1 主电路 PWM 控制部分

主电路部分电源控制管理 IC (U100)采用台湾通嘉公司 LD7537 低待机功耗 IC，外挂 4A/600V MOS 管，变压器 T100，其启动过程为：交流 90V-264V 输入电压直接由交流电经过电阻 R100，R101,R102 输入至 IC (U100)的 5 脚（VCC）PIN，用于给 IC 提供启动电压，当电压达到芯片

启动电压时，IC 开始工作，此时变压器 T100 副边输出端输出电压 16Vdc 进入 IC 的 5 脚（VCC）PIN，用于提供给 IC 正常工作电压。当待机 5VSB 无正常输出时，首先用示波器检测 IC VCC 供电是否正常，如 VCC 出现锯齿波，请检查开关电源是否开路。只有当 5VSB 正常工作后，其他各组才能正常工作。

LD7537 引脚说明如下：

**Pin Descriptions**

| PIN SOT-26 | PIN DIP-8 | NAME | FUNCTION |
|---|---|---|---|
| 1 | 8 | GND | Ground |
| 2 | 7 | COMP | Voltage feedback pin (same as the COMP pin in UC384X). Connect a photo-coupler to close the control loop and achieve the regulation. |
| 3 | 5 | BNO | Brownout Protection Pin. Connect a resistor divider between this pin and bulk capacitor voltage to set the brownout level. If the voltage is less than threshold voltage, the PWM output will be disabled. |
| 4 | 4 | CS | Current sense pin, connect to sense the MOSFET current |
| 5 | 2 | VCC | Supply voltage pin |
| 6 | 1 | OUT | Gate drive output to drive the external MOSFET |

2.2LED 驱动部分

本电源 LED 部分采用 LLC 谐振半桥电路。

BD9211(U1F)芯片内部结构图及各引脚说明如下：

**○Pin Number, Pin Name, Pin Function**

| Pin No | Pin name | Functions | Pin No | Pin name | Functions |
|---|---|---|---|---|---|
| 1 | VCC | Power supply pin for IC (built-in UVLO function) | 10 | PWMIN | PWM signal input pin for burst bright adjustment control |
| 2 | STB | Power ON/OFF control pin for IC | 11 | SDON | Enable pin of COMPSD inputs over voltage detection |
| 3 | GND | Signal/ground pin for internal IC | 12 | SS | Soft-start set up pin |
| 4 | RT | Drive frequency set up terminal. | 13 | FAIL | Error indication signal Output Normal : L, Error : OPEN |
| 5 | FB | Lamp current, lamp voltage, error amp outputs | 14 | COMPSD | Detection pin for over voltage shut down |
| 6 | IS | Error amp input pin for lamp current feedback | 15 | COMP | Detection pin for over voltage and shut-down delay |
| 7 | VS | Error amp input pin for lamp voltage feedback at the opening time. | 16 | PGND | Power Ground for external MOSFET drive |
| 8 | PWMCMP | PWM comparator input pin which controls PWM operation during brightness adjustment. | 17 | N2 | Output pin for external FET drive circuit (Ch. N2) |
| 9 | CP | Timer latch-setting pin | 18 | N1 | Output pin for external FET drive circuit (Ch. N1) |

LED 驱动工作原理

当 MOSFET Q1F 导通时，Q2F 关断时，C13F 两端电压被充电至 385V,Q1F 先关断，变压器 T2F 的励磁电流继续通过 C13F 续流。使 Q1F 的 Vds 上升，Q2F 的 Vds 下降。当 Q2F 的 Vds 下降至 193V 时，变压器极性改变，次级两个整流管 D4F,D6F 同时导通，使变压器次级和初级都短路，因此变压器初级电压为零。在变压器 T2F 次级，输出电感会尽量维持输出电流不变。以上只作基本原理分析，具体见上 LED 原理图。

常见几种故障处理方法

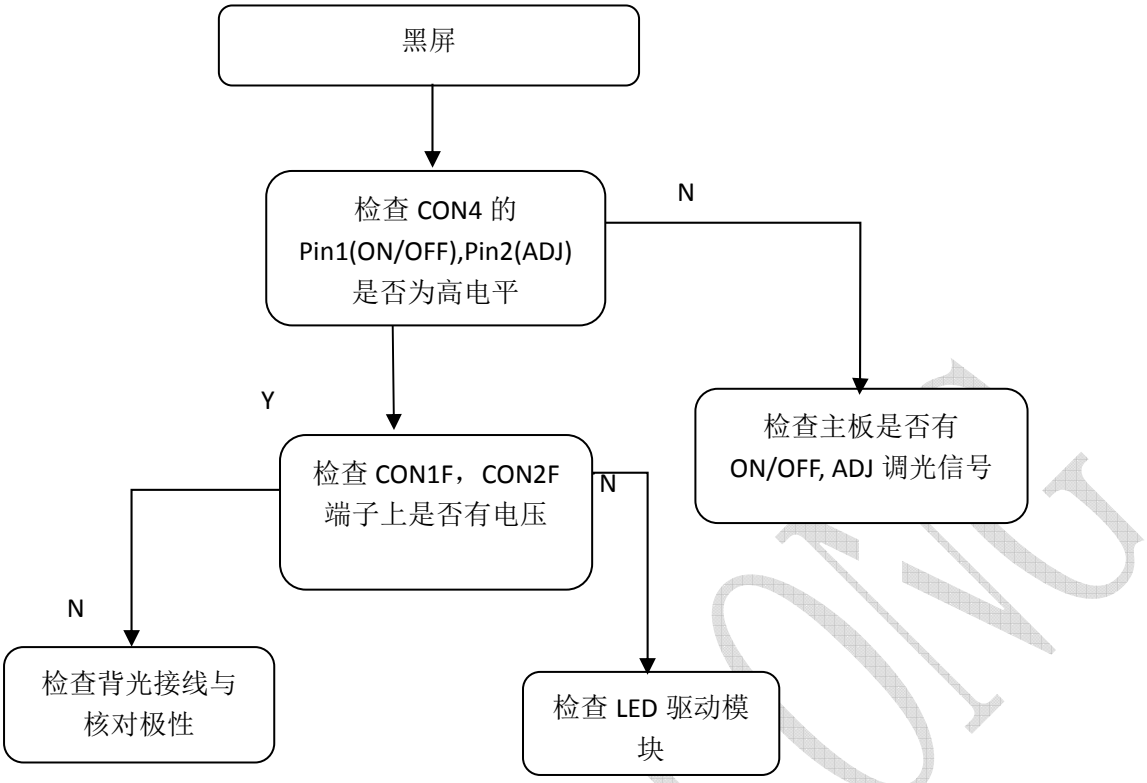
黑屏
检查 CON4 的 Pin1(ON/OFF),Pin2(ADJ) 是否为高电平
N
检查主板是否有 ON/OFF, ADJ 调光信号
Y
检查 CON1F，CON2F 端子上是否有电压
N
N
检查背光接线与核对极性
检查 LED 驱动模块

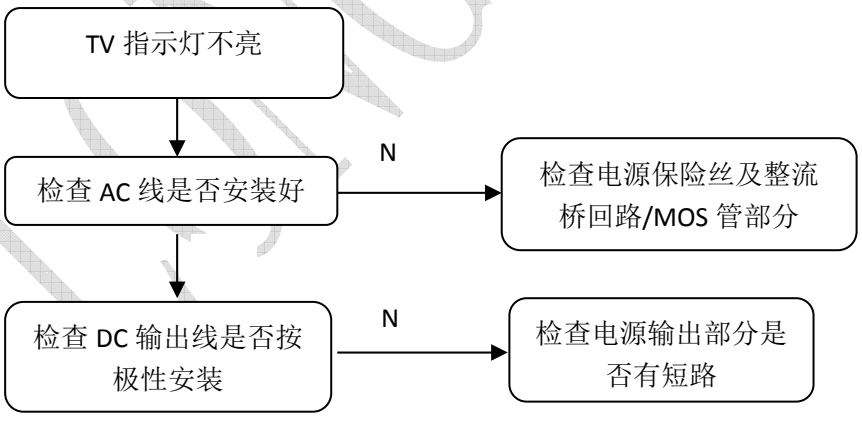
TV 指示灯不亮
检查 AC 线是否安装好
N
检查电源保险丝及整流桥回路/MOS 管部分
检查 DC 输出线是否按极性安装
N
检查电源输出部分是否有短路

LONG LONG

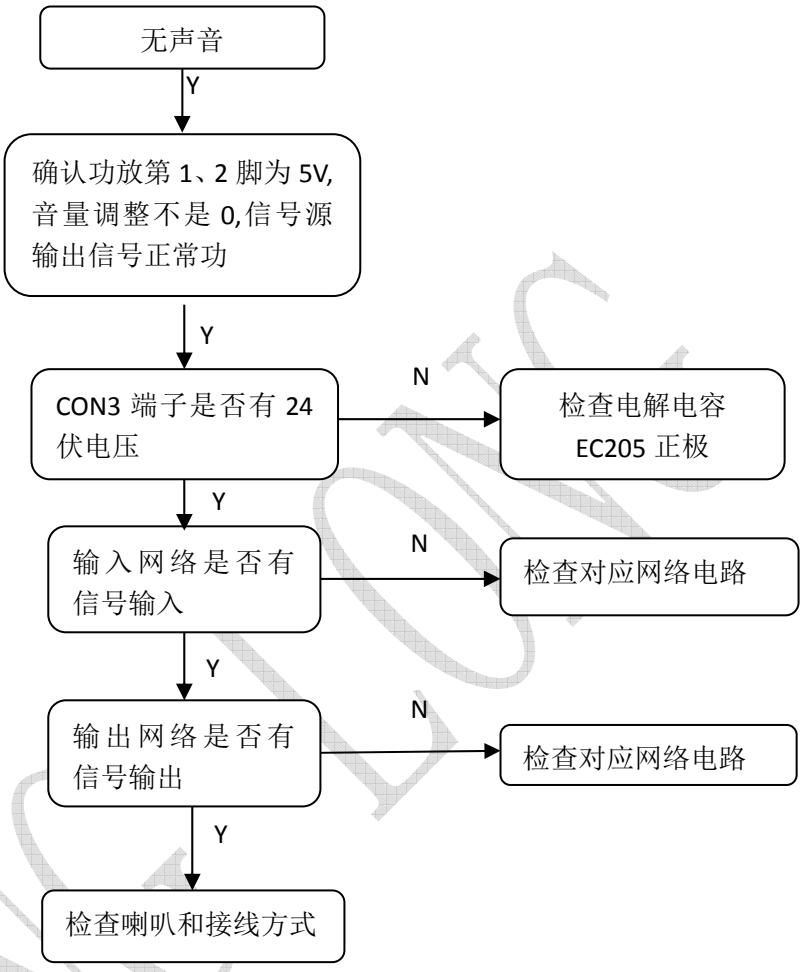


END

技术服务热线：

东莞市奥源电子科技有限公司

LONG LONG

| 序号 | 物料代码 | 物料名称 | 型号规格 | 单位 | 单位用量 | 工位 |
|---|---|---|---|---|---|---|
| 1 | 1IP00089-0505 | IC | LD7537RGL  SOT-26 Leadtrend | PCS | 1 | U100 |
| 2 | 1IP00068-8907 | IC | L6562ADTR,SO-8,ST | PCS | 1 | U300 |
| 3 | 1IP00095-1368 | IC | BD9211F,SOP-18,ROHM | PCS | 1 | U1F |
| 4 | 1TC00001-5728 | 三极管 | PNP,-0.6A/-60V,SOT-23,LMBT2907ALT1G,LRC | PCS | 5 | Q301;Q3F;Q4F;Q6F;Q200 |
|  | 1TC00001-1212 | 三极管 | PNP,-0.6A/-60V,SOT-23,MMBT2907A,CJ | PCS |  | Q301;Q3F;Q4F;Q6F;Q200 |
|  | 1TC00001-0702 | 三极管 | PNP,-0.6A/-60V,SOT-23,MMBT2907A,ON | PCS |  | Q301;Q3F;Q4F;Q6F;Q200 |
| 5 | 1TA00001-5728 | 三极管 | NPN,0.6A/40V,SOT-23,LMBT2222ALT1G,LRC,编带 | PCS | 6 | Q102;Q5F;Q205;Q206;Q201;Q207 |
|  | 1TA00001-1212 | 三极管 | NPN,0.6A/40V,SOT-23,MMBT2222A,CJ,编带 | PCS |  | Q102;Q5F;Q205;Q206;Q201;Q207 |
|  | 1TA00001-0702 | 三极管 | NPN,0.6A/40V,SOT-23,MMBT2222A,ON,编带 | PCS |  | Q102;Q5F;Q205;Q206;Q201;Q207 |
| 6 | 1DA00001-5728 | 二极管 | 0.2A/70V,SOT-23,BAV70,LRC,编带 | PCS | 7 | D2F;D1F;D103;D102;D207;D209;D208 |
|  | 1DA00001-1212 | 二极管 | 0.2A/70V,SOT-23,BAV70,CJ,编带 | PCS |  | D2F;D1F;D103;D102;D207;D209;D208 |
|  | 1DA00001-0702 | 二极管 | 0.2A/70V,SOT-23,BAV70,ON,编带 | PCS |  | D2F;D1F;D103;D102;D207;D209;D208 |
| 7 | 1DZ00014-5728 | 稳压二极管 | 0.225W/13V,SOT-23,LBZX84C13LT1G,LRC,编带 | PCS | 1 | ZD204 |
|  | 1DZ00014-1513 | 稳压二极管 | 0.25W/13V,SOT-23,BZX84-C13V,NXP,编带 | PCS |  | ZD204 |
|  | 1DZ00014-0808 | 稳压二极管 | 0.35W/13V,SOT-23,BZX84-C13V,ST,编带 | PCS |  | ZD204 |
| 8 | 1DZ00015-5728 | 稳压二极管 | 0.225W/15V,SOT-23,BZX84-C15V,LRC,编带 | PCS | 3 | Z102;ZD201;ZD203 |
|  | 1DZ00015-1513 | 稳压二极管 | 0.5W/15V,SOT-23,BZX84-C15V,NXP,编带 | PCS |  | Z102;ZD201;ZD203 |
|  | 1DZ00015-0808 | 稳压二极管 | 0.35W/15V,SOT-23,BZX84-C15V,ST,编带 | PCS |  | Z102;ZD201;ZD203 |
| 9 | 1DZ00032-5728 | 稳压二极管 | 24V/0.225W,SOT-23,BZX84-C24V,LRC | PCS | 2 | Z101;ZD202 |
|  | 1DZ00032-1513 | 稳压二极管 | 24V/0.5W,SOT-23,BZX84-C24V,NXP | PCS |  | Z101;ZD202 |
|  | 1DZ00032-0808 | 稳压二极管 | 24V/0.5W,SOT-23,BZX84-C24V,ST | PCS |  | Z101;ZD202 |
| 10 | 1DZ00081-5728 | 稳压二极管 | 33V±4V,0.225W,SOT-23,LBZX84C33LT1G,LRC | PCS | 1 | ZD200 |
|  | 1DZ00081-0802 | 稳压二极管 | 33V/0.35W,5%,SOT-23,BZX84C-33V,ST, | PCS |  | ZD200 |
| 11 | 1DZ00033-5728 | 稳压二极管 | 12V/0.5W,SOD-123,LBZT52C12T1G,LRC | PCS | 1 | ZD1F |
| 12 | 1TN00056-0404 | MOS管 | N沟道,14.7A/100V,TO-252(贴片),(ME15N10-G)ME15N10,MEAT | PCS | 1 | Q202 |
| 13 | 1TN00005-0404 | MOS管 | N沟道,50A/30V,TO-252(SMT),ME60N03(ME60N03S),MEAT | PCS | 1 | Q203 |
| 14 | 1TN00123-8061 | MOS管 | N沟道,45.7A/30V,TO-252(贴片),MDD1502,Magnachip | PCS | 1 | Q204 |
|  | 1TN00005-0404 | MOS管 | N沟道,50A/30V,TO-252(SMT),ME60N03(ME60N03S),MEAT | PCS |  | Q204 |
| 15 | 2RH00072-2412 | SMD电阻 | 510Ω,1/16W,100V,F,0603 | PCS | 1 | R224 |
| 16 | 2RH00039-2412 | SMD电阻 | 1K,1/16W,100V,F,0603 | PCS | 1 | R228 |
| 17 | 2RH00028-2412 | SMD电阻 | 1K,1/16W,100V,J,0603 | PCS | 3 | R120;R14F;R219 |
| 18 | 2RH00029-2412 | SMD电阻 | 2K,1/16W,100V,J,0603 | PCS | 2 | R218;R225 |
| 19 | 2RH00120-2412 | SMD电阻 | 3K,1/16W,100V,F,0603 | PCS | 1 | R229 |
| 20 | 2RH00073-2412 | SMD电阻 | 5.1K,1/16W,100V,F,0603 | PCS | 1 | R230 |

| | | | | | | |
|---|---|---|---|---|---|---|
| 21 | 2RH00033-2412 | SMD电阻 | 10K,1/16W,100V,F,0603 | PCS | 2 | R35F;R214 |
| 22 | 2RH00023-2412 | SMD电阻 | 10K,1/16W,100V,J,0603 | PCS | 4 | R16F;R12F;R215;R236 |
| 23 | 2RH00017-2412 | SMD电阻 | 15K,1/16W,100V,J,0603 | PCS | 1 | R304 |
| 24 | 2RH00021-2412 | SMD电阻 | 20K,1/16W,100V,F,0603 | PCS | 2 | R13F;R235 |
| 25 | 2RH00020-2412 | SMD电阻 | 24K,1/16W,100V,F,0603 | PCS | 1 | R308 |
| 26 | 2RH00111-2412 | SMD电阻 | 36K,1/16W,100V,F,0603 | PCS | 1 | R17F |
| 27 | 2RH00076-2412 | SMD电阻 | 43K,1/16W,100V,F,0603 | PCS | 1 | R312 |
| 28 | 2RH00015-2412 | SMD电阻 | 47K,1/16W,100V,J,0603 | PCS | 1 | R306 |
| 29 | 2RH00090-2412 | SMD电阻 | 51K,1/16W,100V,J,0603 | PCS | 1 | R46F |
| 30 | 2RH00011-2412 | SMD电阻 | 68K,1/16W,100V,F,0603 | PCS | 1 | R18F |
| 31 | 2RH00091-2412 | SMD电阻 | 100K,1/16W,100V,J,0603 | PCS | 2 | R11F;R216 |
| 32 | 2RH00014-2412 | SMD电阻 | 470K,1/16W,100V,F,0603 | PCS | 1 | R231 |
| 33 | 2RH00138-2412 | SMD电阻 | 620K,1/16W,100V,J,0603 | PCS | 1 | R305 |
| 34 | 2RS00010-2412 | SMD电阻 | 0Ω,1/10W,150V,J,0805 | PCS | 2 | JP3;JP4 |
| 35 | 2RS00005-2412 | SMD电阻 | 10Ω,1/10W,150V,J,0805 | PCS | 3 | R317;R315;R2F |
| 36 | 2RS00145-2412 | SMD电阻 | 300Ω,1/10W,150V,F,0805 | PCS | 2 | R21F;R227 |
| 37 | 2RS00032-2412 | SMD电阻 | 470Ω,1/10W,150V,F,0805 | PCS | 1 | R307 |
| 38 | 2RS00009-2412 | SMD电阻 | 470Ω,1/10W,150V,J,0805 | PCS | 3 | R314;R237;R242 |
| 39 | 2RS00097-2412 | SMD电阻 | 1K,1/10W,150V,J,0805 | PCS | 6 | R6F;R9F;R132;R32F;R34F;R15F |
| 40 | 2RS00164-2412 | SMD电阻 | 2K,1/10W,150V,J,0805 | PCS | 1 | R210 |
| 41 | 2RS00058-2412 | SMD电阻 | 5.1k,1/10W,150V,F,0805 | PCS | 1 | R232 |
| 42 | 2RS00003-2412 | SMD电阻 | 10K,1/10W,150V,F,0805 | PCS | 1 | R36F |
| 43 | 2RS00002-2412 | SMD电阻 | 10K,1/10W,150V,J,0805 | PCS | 9 | R316;R7F;R10F;R113;R131;R31F;R1F;R223;R222 |
| 44 | 2RS00020-2412 | SMD电阻 | 20K,1/10W,150V,F,0805 | PCS | 2 | R213;R45F |
| 45 | 2RS00110-2412 | SMD电阻 | 20K,1/10W,150V,J,0805 | PCS | 2 | R217;R211 |
| 46 | 2RS00154-2412 | SMD电阻 | 47K,1/10W,150V,J,0805 | PCS | 1 | R20F |
| 47 | 2RS00103-2412 | SMD电阻 | 100K,1/10W,150V,J,0805 | PCS | 2 | R124;R239 |
| 48 | 2RS00052-2412 | SMD电阻 | 200K,1/10W,150V,J,0805 | PCS | 1 | R221 |
| 49 | 2RT00004-2412 | SMD电阻 | 0Ω,1/4W,200V,J,1206 | PCS | 6 | JP5;JP10;R22F;JP2;JP8;JP6 |
| 50 | 2RT00007-2412 | SMD电阻 | 4.7Ω,1/4W,200V,J,1206 | PCS | 2 | R121;R122 |
| 51 | 2RT00014-2412 | SMD电阻 | 10Ω,1/4W,200V,J,1206 | PCS | 6 | R3F;R4F;R206;R207;R103;R104 |
| 52 | 2RT00005-2412 | SMD电阻 | 20Ω,1/4W,200V,J,1206 | PCS | 1 | R112 |
| 53 | 2RT00008-2412 | SMD电阻 | 33Ω,1/4W,200V,J,1206 | PCS | 6 | R202;R203;R204;R205;R200;R201 |
| 54 | 2RT00199-2412 | SMD电阻 | 47Ω,1/4W,200V,J,1206 | PCS | 3 | R111;R5F;R8F |

| | | | | | | |
|---|---|---|---|---|---|---|
| 55 | 2RT00013-2412 | SMD电阻 | 68Ω,1/4W,200V,J,1206 | PCS | 1 | R313 |
| 56 | 2RT00108-2412 | SMD电阻 | 470Ω,1/4W,200V,J,1206 | PCS | 1 | R238 |
| 57 | 2RT00040-2412 | SMD电阻 | 1K,1/4W,200V,F,1206 | PCS | 1 | R33F |
| 58 | 2RT00015-2412 | SMD电阻 | 1K,1/4W,200V,J,1206 | PCS | 1 | R209 |
| 59 | 2RT00019-2412 | SMD电阻 | 2K,1/4W,200V,J,1206 | PCS | 2 | R30F;R226 |
| 60 | 2RT00039-2412 | SMD电阻 | 6.8K,1/4W,200V,J,1206 | PCS | 2 | R240;R220 |
| 61 | 2RT00060-2412 | SMD电阻 | 12K,1/4W,200V,F,1206 | PCS | 1 | R47F |
| 62 | 2RT00120-2412 | SMD电阻 | 20K,1/4W,200V,J,1206 | PCS | 1 | R212 |
| 63 | 2RT00012-2412 | SMD电阻 | 68K,1/4W,200V,J,1206 | PCS | 8 | R52F;R53F;R24F;R25F;R26F;R27F;R28F;R29F |
| 64 | 2RT00079-2412 | SMD电阻 | 330K,1/4W,200V,J,1206 | PCS | 3 | R100;R101;R102 |
| 65 | 2RT00076-2412 | SMD电阻 | 560K,1/4W,200V,J,1206 | PCS | 4 | R300;R301;R302;R303 |
| 66 | 2RT00132-2412 | SMD电阻 | 1M,1/4W,200V,F,1206 | PCS | 3 | R309;R310;R311 |
| 67 | 2RT00098-2412 | SMD电阻 | 1.2M,1/4W,200V,J,1206 | PCS | 4 | R1;R2;R3;R4 |
| 68 | 2RT00111-2412 | SMD电阻 | 2M,1/4W,200V,J,1206 | PCS | 3 | R128;R129;R130 |
| 69 | 2CC00034-2412 | SMD电容 | NPO,101/50V,J,0805 | PCS | 2 | C302;C102 |
| 70 | 2CC00010-2412 | SMD电容 | X7R,103/50V,K,0805 | PCS | 2 | C100;C6F |
| 71 | 2CC00025-2412 | SMD电容 | Y5V,105/50V,Z,0805 | PCS | 3 | C101;C9F;C2F |
| 72 | 2CE00060-2412 | SMD电容 | X7R,334/50V,K,0603 | PCS | 2 | C303;C304 |
| 73 | 2CC00026-2412 | SMD电容 | X7R,472/50V,K,0805 | PCS | 1 | C5F |
| 74 | 2CC00070-2412 | SMD电容 | X7R,474/50V,K,0805 | PCS | 1 | C8F |
| 75 | 2CE00028-2412 | SMD电容 | X7R,101/50V,K,0603 | PCS | 1 | C7F |
| 76 | 2CE00009-2412 | SMD电容 | X7R,102/50V,K,0603 | PCS | 1 | C4F |
| 77 | 2CE00005-2412 | SMD电容 | X7R,103/50V,K,0603 | PCS | 3 | C301;C10F;C209 |
| 78 | 2CE00001-2412 | SMD电容 | X7R,104/50V,K,0603 | PCS | 11 | C306;C103;C1F;C14F;C205;C207;C206;C211;C212;C210;C203 |
| 79 | 2CE00057-2412 | SMD电容 | X7R,224/50V,K,0603 | PCS | 1 | C208 |
| 80 | 2CE00024-2412 | SMD电容 | X7R,472/50V,K,0603 | PCS | 1 | C18F |
| 81 | 2CE00044-2412 | SMD电容 | X7R,473/50V,K,0603 | PCS | 1 | C204 |
| 82 | 2CE00059-2412 | SMD电容 | X7R,474/50V,K,0603 | PCS | 1 | C11F |
| 83 | 2CE00058-2412 | SMD电容 | X5R,684/16V,K,0603 | PCS | 1 | C12F |
| 84 | 4JF00002-0100 | 跳线 | Φ0.6,镀锡铜线 | 千克 | 0.001643 | J1(10);J12(20);J6(15);J3(10);J7(15);J9(10);J10(20);J16(15);J23(20);J5(7.5);J18(15);J21(15);J15(15);J2(20);J20(15);J19(10);J22(10);J13(10);J8(15);J14(10);J24(10);L3(7);J11(10);J4(20) |

| | | | | | | |
|---|---|---|---|---|---|---|
| 85 | 3BS00549-1402 | PCB | CEM-1,175*200*1.6mm,绿色,OSP,1OZ,AY156D-4SF04-167,ZD | PCS | 1 | FOR PACK |
| 86 | 1DR00004-0213 | 整流二极管 | 2A/1000VRRM,DO-15,RL207,MIC,编带 | PCS | 1 | D100 |
| | 1DR00004-3504 | 整流二极管 | 2A/1000VRRM,DO-15,RL207,GW,编带 | PCS | | D100 |
| | 1DR00004-5728 | 整流二极管 | 2A/1000VRRM,DO-15,RL207,LRC,编带 | PCS | | D100 |
| 87 | 1DC00002-0213 | 快恢复二极管 | 1A/1000VRRM,DO-41,FR107,MIC,编带 | PCS | 2 | D101;D206 |
| | 1DC00002-3504 | 快恢复二极管 | 1A/1000VRRM,DO-41,FR107,GW,编带 | PCS | | D101;D206 |
| | 1DC00002-5728 | 快恢复二极管 | 1A/1000VRRM,DO-41,FR107,LRC,编带 | PCS | | D101;D206 |
| 88 | 1DC00056-5728 | 快恢复二极管 | 2A/400VRRM,DO-15,HER205,LRC,编带 | PCS | 4 | D4F;D5F;D6F;D7F |
| 89 | 1TA00007-1214 | 三极管 | NPN,0.6A/40V,TO-92,MPS2222A,CJ,编带 | PCS | 1 | Q103 |
| 90 | 1IA00001-0909 | 基准稳压器 | 1%/36V,TO-92,KA431AZTA-F065,FAIRCHILD,编带 | PCS | 2 | U200;U2F |
| | 1IA00010-6915 | 基准稳压器 | 0.4%/40V,TO-92,AZ431AZ-ATRE1,BCD,编带料 | PCS | | U200;U2F |
| 91 | 2EB00171-1241 | 电解电容 | 470uF/25V,105℃,KF,10*12.5mm,1080mm,4000H,CAPXON | PCS | 1 | EC203 |
| | 2EB00444-1241 | 电解电容 | GF/4000H,470uF/25V,1270mA,105℃,Φ10*12.5mm,普通/L:20mm,CAPXON,N/A | PCS | | EC203 |
| 92 | 2EB00168-1241 | 电解电容 | KF/2000H,10uF/50V,120mA,105℃,Φ5*11mm,普通/L:20mm,CAPXON,编带 | PCS | 1 | EC300 |
| | 2EB00168-1300 | 电解电容 | GF/2000H,10uF/50V,100mA,105℃,Φ5*11mm,普通/L:19mm,SAMXON,编带 | PCS | | EC300 |
| 93 | 2EB00271-1241 | 电解电容 | KF/2000H,4.7uF/50V,90mA,105℃,Φ5*11mm,普通/L:20mm,CAPXON,N/A | PCS | 1 | EC103 |
| | 2EB00272-1300 | 电解电容 | GF/2000H,4.7uF/50V,88mA,105℃,Φ5*11mm,普通/L:19mm,SAMXON,编带 | PCS | | EC103 |
| 94 | 2EB00144-1241 | 电解电容 | KF/2000H,47uF/50V,290mA,105℃,Φ6.3*11mm,普通/L:20mm,CAPXON,N/A | PCS | 2 | EC102;EC206 |
| | 2EB00215-1300 | 电解电容 | GF/2000H,47uF/50V,295mA,105℃,Φ6.3*11mm,普通/L:19mm,SAMXON,编带 | PCS | | EC102;EC206 |
| 95 | 2EB00210-1300 | 电解电容 | 470uF/16V,105℃,GF,10*12.5,865mA,3000H,SAMXON,（2EB00224相同） | PCS | 2 | EC200;EC201 |
| | 2EB00224-1300 | 电解电容 | GF/3000H,470uF/16V,865mA,105℃,Φ10*12.5mm,普通/L:19mm,SAMXON,N/A（2EB0021 | PCS | | EC200;EC201 |
| | 2EB00106-1241 | 电解电容 | 470uF/16V,105℃,KF,10*12.5mm,750mA,5000H,CAPXON | PCS | | EC200;EC201 |
| 96 | 2EB00167-1241 | 电解电容 | 100uF/25V,105℃,KM,6.3*11,T/A2.5,145mA,2000H,CAPXON | PCS | 1 | EC208 |
| | 2EB00167-1300 | 电解电容 | 100uF/25V,105℃,KM,6.3*11,159mA,1000H,SAMXON,编带 | PCS | | EC208 |
| 97 | 2EB00109-1241 | 电解电容 | KF/2000H,100uF/35V,385mA,105℃,Φ6.3*11mm,普通/L:20mm,CAPXON,编带 | PCS | 1 | EC207 |
| | 2EB00188-1300 | 电解电容 | 100uF/35V,105℃,GF,6.3*11,340mA,2000H,SAMXON,编带 | PCS | | EC207 |
| 98 | 2EB00018-1241 | 电解电容 | KM/2000H,220uF/16V,215mA,105℃,Φ6.3*11mm,普通/L:20mm,CAPXON,编带 | PCS | 1 | EC210 |
| | 2EB00018-1300 | 电解电容 | KM/1000H,220uF/16V,213mA,105℃,Φ6.3*11mm,普通/L:20mm,SAMXON,编带 | PCS | | EC210 |
| 99 | 2CD00080-0547 | 瓷片电容 | LB,100PF/1KV,K,蓝色,直插,P:5.0,汇桥,低散逸因数型(直脚) 编带 | PCS | 1 | C105 |
| | 2CD00080-0700 | 瓷片电容 | Y5R低耗,100PF/1KV,K,Φ8.0*4.0mm,P:5.0/16.0mm,蓝色,成功,编带 | PCS | | C105 |
| 100 | 2CD00006-0700 | 瓷片电容 | Y5P,221/1KV,K,Φ8.0*4.0mm,P:5.0/L:20mm,土黄,成功,编带（片装） | PCS | 1 | C104 |
| | 2CD00006-0600 | 瓷片电容 | Y5P,221/1KV,K,Φ5.5*4.0mm,P:5.0/L≥15mm,土黄,南华,编带 | PCS | | C104 |
| | 2CD00072-0547 | 瓷片电容 | Y5P,221/1KV,K,土黄,直插,PH:5.0, 汇桥 编带 | PCS | | C104 |
| 101 | 2CD00045-0700 | 瓷片电容 | Y5P,471/1KV,K,Φ8.0*4.0mm,P:5.0/L:16mm,蓝色,成功,编带 | PCS | 1 | C202 |
| | 2CD00045-0600 | 瓷片电容 | Y5P,471/1KV,K,Φ6.5*4.0mm,P:5.0/L≥15mm,蓝色,南华,编带 | PCS | | C202 |

| | | | | | | |
|---|---|---|---|---|---|---|
| 102 | 2CD00001-0700 | 瓷片电容 | Z5U,222/1KV,M, Φ8.0*4.0mm,P:5.0/L:16mm,土黄,成功,编带(片装) | PCS | 2 | C201;C200 |
| | 2CD00001-0547 | 瓷片电容 | Z5U,222/1KV,M, Φ6.0*4.5mm,P:5.0/L:20mm,土黄,汇侨,编带 | PCS | | C201;C200 |
| | 2CD00001-0600 | 瓷片电容 | Z5U,222/1KV,M, Φ6.5*4.0mm,P:5.0/L:≥15mm,土黄,南华,编带 | PCS | | C201;C200 |
| 103 | 2CDE0078-0700 | 瓷片电容 | SL,47PF/1KV,J,蓝色,直插,P:5.0,成功 (内K脚) 编带 | PCS | 1 | C307 |
| 104 | 2CD00044-0600 | 瓷片电容 | Y5P,472/1KV,K,蓝色,直插P:5.0,南华,编带 | PCS | 1 | C107 |
| 105 | 2RF00057-1900 | 金属氧化膜电阻 | MOF,100K/350V,2W(S),11.0*Φ4.5*0.7mm,J,竞达成,编带 | PCS | 1 | R110 |
| | 2RF00057-3800 | 金属氧化膜电阻 | MOF,100K/500V,2W(S),11.0*Φ4.0*0.7mm,J,颖发,编带 | PCS | | R110 |
| 106 | 2RF00035-1900 | 金属氧化膜电阻 | MOF,0.3R,2W,S,J,竞达成 | PCS | 1 | R115 |
| | 2RF00035-3800 | 金属氧化膜电阻 | MOF,0.3R,2W,S,J,颖发 编带 | PCS | | R115 |
| 107 | 2RF00030-1900 | 金属氧化膜电阻 | MOF,0.27R/350V,2W(S),11.0*Φ4.5*0.7mm,J,竞达成,编带 | PCS | 2 | R318;R319 |
| | 2RF00030-3800 | 金属氧化膜电阻 | MOF,0.27R/500V,2W(S),11.0*Φ4.0*0.7mm,J,颖发,编带 | PCS | | R318;R319 |
| 108 | 8LB00007-4400 | 磁珠 | RH,3.5*10*0.8T/R | PCS | 2 | L200;L201 |
| | 8LB00007-6100 | 磁珠 | RH,3.5*9.0*0.8 | PCS | | L200;L201 |
| 109 | 8LB00001-4400 | 磁珠 | LH16,RH,3.5*0.8*4.5 | PCS | 1 | B300 |
| | 8LB00001-6100 | 磁珠 | RH3.5*4.7*0.8 | PCS | | B300 |
| 1 | 7BJ01541-0100 | 半成品 | AY156D-4SF16-080,PCBA | PCS | 1 | FOR PACK |
| 2 | 5HA00708-0100 | 散热器 | 113*30*6.5mm,AL6063-T5,白色,AY170D-4SF01,HS1 | PCS | 1 | HS1 |
| 3 | 5HA00642-0100 | 散热器 | 35.0*26.0*2.0mm,AL100F,银白色,AY128D-4SF01,HS3 | PCS | 1 | HS3 |
| 4 | 8TI00569-0101 | 变压器 | EFD-31/EFD-30H,PH:5.0/45.9mm,卧式,AY156D-4SF03, Φ0.3*1P*64TS,L(3-1)=600uH± | PCS | 1 | T100 |
| 5 | 8TI00240-0102 | 变压器 | EE-16,AY120P-4HF01-T2F, Φ0.2*30TS,L(7-9)=800uH MIN,版本:02 | PCS | 1 | T1F |
| 6 | 8TI00400-0101 | 变压器 | EM-35/EFD-35H,PH:5.5-8.0/58.0mm,卧式,AY128D-4SF01-T2F, Φ0.1*20C*55TS,L(5-2 | PCS | 1 | T2F |
| 7 | 8LE00187-0101 | 电感 | EQ-31/EQ-30V,PH:5.0/40.0mm,立式,AY136P-4SF01-L2, Φ0.1*30C*40Ts,L(6-8,9)=30 | PCS | 1 | L300 |
| 8 | 8LE01188-0101 | 电感 | T16*9.6*8+C,PH:7.5/5.0mm,卧式,AY136P-4SF01-LF1, Φ0.5*1P*46Ts,L(1-4)=(2-3)= | PCS | 2 | L1;L2 |
| 9 | 1DB00008-6728 | 桥式整流二极管 | 4A/600V,扁形/扁脚(有螺丝孔),T4SB60,天津中环,P:7.5mm | PCS | 1 | BG1 |
| | 1DB00008-8159 | 桥式整流二极管 | 4A/600V,扁形/扁脚(有螺丝孔),KBJ406G,LITE-ON,P:7.5mm | PCS | | BG1 |
| 10 | 1TN00090-3415 | MOS管 | N沟道,8A/500V,SC-67(塑封),TK8A50D,TOSHIBA | PCS | 1 | Q300 |
| | 1TN00024-8061 | MOS管 | N沟道,9A/500V,0.85Ω,TO-220F,塑封,MDF9N50BTH,Magnachip | PCS | | Q300 |
| 11 | 1TN00109-3425 | MOS管 | N沟道,5A/500V,TO-220F(塑封),TK5A50D(K5A50D),TOSHIBA | PCS | 2 | Q1F;Q2F |
| 12 | 1TN00059-8061 | MOS管 | N沟道,4.6A/600V,TO-220F(塑封) ,MDF4N60BTH,MagnaChip | PCS | 1 | Q100 |
| | 1TN00082-3415 | MOS管 | N沟道,3.5A/600V,1.7Ω,TO-220,塑封,TK4A60DA,TOSHIBA | PCS | | Q100 |
| 13 | 1DC00014-8907 | 快恢复二极管 | 8A/600VRRM,TO-220FPAB(塑封),STTH8S06,ST,N/A | PCS | 1 | D300 |
| | 1DC00014-0909 | 快恢复二极管 | 8A/600VRRM,TO-220F(塑封),ISL9R860PF2,FAIRCHILD,N/A | PCS | | D300 |
| 14 | 1DC00004-0213 | 快恢复二极管 | 5A/60VRRM,DO-27,SR560,MIC,编带 | PCS | 2 | D200;D210 |
| | 1DC00004-5728 | 快恢复二极管 | 5A/60VRRM,DO-201AD,SR560,LRC,编带 | PCS | | D200;D210 |
| | 1DC00004-3514 | 快恢复二极管 | 5A/60VRRM,DO-27,SR560,GW,编带 | PCS | | D200;D210 |

| | | | | | | |
|---|---|---|---|---|---|---|
| 15 | 1DC00012-0213 | 快恢复二极管 | 5A/100VRRM,DO-27,SR5100,MIC,编带 | PCS | 1 | D211 |
| | 1DC00012-5728 | 快恢复二极管 | 5A/100VRRM,DO-201AD,SB5100,LRC,编带 | PCS | | D211 |
| | 1DC00012-3514 | 快恢复二极管 | 5A/100VRRM,DO-27,SR5100,GW,编带 | PCS | | D211 |
| 16 | 1DC00047-0213 | 快恢复二极管 | 5A/200VRRM,DO-27,SR5200,MIC,编带 | PCS | 1 | D204 |
| | 1DC00047-5728 | 快恢复二极管 | 5A/200VRRM,DO-201AD,SB5200,LRC,编带 | PCS | | D204 |
| | 1DC00047-3514 | 快恢复二极管 | 5A/200VRRM,DO-27,SR5200,GW,编带 | PCS | | D204 |
| 17 | 1OT00002-1610 | 光耦 | 50mA/6V,DIP-4,EL817B,EVERLIGHT,P:2.54mm | PCS | 2 | PC100;PC200 |
| | 1OT00002-8111 | 光耦 | 50mA/6V,DIP-4,LTV-817B,LITEON,P:2.54mm | PCS | | PC100;PC200 |
| | 1OT00002-8311 | 光耦 | 50mA/6V,K1010B,N/A,(1010,817)COSMO,P:2.54mm | PCS | | PC100;PC200 |
| 18 | 2EB00491-1241 | 电解电容 | KY/2000H,47uF/450V,350mA,105℃,Φ13*30mm,普通/L:20mm,CAPXON,N/A | PCS | 2 | EC100;EC101 |
| 19 | 2EB00007-1241 | 电解电容 | KF/5000H,470uF/35V,1090mA,105℃,Φ10*16mm,普通/L:20mm,CAPXON,N/A | PCS | 1 | EC205 |
| | 2EB00184-1300 | 电解电容 | 470uF/35V,105℃,GF,10*16,1210mA,3000H,SAMXON | PCS | | EC205 |
| 20 | 2CX00021-0800 | X电容 | N/A,224/275VAC,K,17.0*14.0*6.0mm,P:15/L:28mm,黄色,UTX,N/A | PCS | 1 | CX1 |
| | 2CX00021-0600 | X电容 | N/A,224/300VAC,k,18.0*12.0*6.0mm,P:15/L:15mm,黄色,南华,N/A | PCS | | CX1 |
| 21 | 2CX00012-0800 | X电容 | N/A,474/275VAC,K,17.0*16.0*10.3mm,P:15/L:28mm,黄色,UTX,N/A | PCS | 1 | CX2 |
| | 2CX00012-0600 | X电容 | N/A,474/300VAC,K,18.0*16.0*10.0mm,P:15/L:20mm,黄色,南华,N/A | PCS | | CX2 |
| 22 | 2CY00037-0700 | Y电容 | Y5P,221/250VAC,K,Φ7.5*5.5mm,P:10/L:3.5mm,蓝色,成功,(外弯) | PCS | 2 | CY1;CY2 |
| | 2CY00037-0600 | Y电容 | Y5P,221/250VAC,K,Φ7.0*6.0mm,P:10/L:3.5mm,蓝色,南华,N/A | PCS | | CY1;CY2 |
| | 2CY00037-0547 | Y电容 | Y5P,221/250VAC,K,Φ7.0*5.0mm,P:10/L:3.5mm,蓝色,汇侨,N/A | PCS | | CY1;CY2 |
| 23 | 2CY00034-0700 | Y电容 | Y5U,102/250VAC,M,Φ8.0*5.5mm,P:10/L:3.5mm,蓝色,成功,N/A(外弯) | PCS | 1 | CY3 |
| | 2CY00034-0600 | Y电容 | Y5U,102/250VAC,M,Φ7.0*6.0mm,P:10/1:3.5mm,蓝色,南华,N/A | PCS | | CY3 |
| | 2CY00034-0547 | Y电容 | Y5U,102/250VAC,M,Φ10.0*5.0mm,P:10/L:3.5mm,蓝色,汇侨,N/A | PCS | | CY3 |
| 24 | 2RF00147-3800 | 金属氧化膜电阻 | MOF,10R,2W,J,颖发,编带 | PCS | 3 | R41F;R42F;R43F |
| 25 | 2OP00024-1000 | 薄膜电容 | N/A,223/630V,J,17.5*11.0*5.0mm,P:15/L:18-26mm,灰色,法拉,N/A (MMKP82-630V- | PCS | 1 | C13F |
| 26 | 2OP00017-1400 | 薄膜电容 | 474/450V,J,红色,12.5*15.5*7.5,P:15,NIS,MMX450J474,日精 | PCS | 2 | C21F;C20F |
| | 2OP00017-1000 | 薄膜电容 | 474/450V,17.8*12.6*5.7,P15,2S474J,法拉 | PCS | | C21F;C20F |
| 27 | 2OP00091-1400 | 薄膜电容 | 474/250V,K,18*12.5*5.3,P:15mm,MMC250K474,日精（红色） | PCS | 1 | C15F |
| 28 | 2OP00087-1400 | 薄膜电容 | 105/450V,J,18.3*12.5*9.1,P:15.0mm,MPX0450K10500000000,日精 橙色 | PCS | 1 | C300 |
| 29 | 2OP00001-1000 | 薄膜电容 | N/A,472/400V,J,7.0*2.0*6.0mm,P:5/L:4min,灰色,法拉,N/A (CL23B) | PCS | 1 | C106 |
| 30 | 2OP00018-1000 | 薄膜电容 | N/A,104/250V,J,10.0*10.0*6.0mm,P:7.5/L:18mm,红色,法拉,N/A (CL21) | PCS | 1 | C305 |
| 31 | 3UC00006-0334 | 保险丝 | Φ5.9*21.5TSC+P,5A/250V,70.8,陶瓷带引脚,慢断,华德 | PCS | 1 | F1 |
| | 3UC00006-1639 | 保险丝 | Φ5.6*21.5,5A/250V,524,陶瓷带引脚,慢断,Bettel | PCS | | F1 |
| 32 | 2FN00021-0600 | 热敏电阻 | NTC,5Ω/4A,直脚/L:15mm,Φ12.5*5.5mm,N/A,南华,散装(5D-11) | PCS | 1 | TR1 |
| | 2FN00018-1642 | 热敏电阻 | Φ11.5,5Ω,4A,直脚,SCK10054MSY,SCK-054,TKS | PCS | | TR1 |
| 33 | 2FS00019-0600 | 压敏电阻 | N/A,560V,直脚/L:23mm,Φ10*7.3mm,K,10N561K,南华,N/A(黄色) | PCS | 1 | VR1 |

| | | | | | | |
|---|---|---|---|---|---|---|
| 34 | 3TI00011-0100 | AC连接器 | PH:3.96mm,三缺一,白色,带卡色,镀锡,DIP,卧式,,(3962P)0300T-SN02 | PCS | 1 | CON1 |
| | 3TI00011-4300 | AC连接器 | PH:3.96mm,三缺一,白色,带卡勾,镀锡,DIP,卧式,A3962AWG-3P2-A5WA-P(VH-3AW) | PCS | | CON1 |
| 35 | 3TO00032-0100 | 输出插座 | PH:2.5mm,10PIN,180° 直插,2501P1000T,联盈 | PCS | 1 | CON2 |
| | 3TO00032-0200 | 输出插座 | PH:2.5mm,10PIN,180° 直插,KJ-2501WV-10P,鸿盛富康 | PCS | | CON2 |
| | 3TO00161-4300 | 输出插座 | PH:2.5mm,10PIN,白色,N/A,镀锡,DIP,立式,A2501A-10-A5WA-P | PCS | | CON2 |
| | 3TO00161-5500 | 输出插座 | PH:2.5mm,10PIN,白色,N/A,镀锡,DIP,立式,XHK-10AL | PCS | | CON2 |
| 36 | 3TO00001-0100 | 输出插座 | PH:2.5mm,4PIN,本色,N/A,镀锡,DIP,立式,2501P0400T | PCS | 1 | CON3 |
| | 3TO00001-0200 | 输出插座 | PH:2.5mm,4PIN,本色,N/A,镀锡,DIP,立式,KJ-2501WV-4P | PCS | | CON3 |
| | 3TO00158-4300 | 输出插座 | PH:2.5mm,4PIN,白色,N/A,镀锡,DIP,立式,,A2501A-04-A5WA-P | PCS | | CON3 |
| | 3TO00158-5500 | 输出插座 | PH:2.5mm,4PIN,白色,N/A,镀锡,DIP,立式,XHK-4AL | PCS | | CON3 |
| 37 | 3TO00036-0100 | 输出插座 | PH:2.0mm,3PIN,自然色,N/A,镀锡,DIP,立式,2002P0300T | PCS | 3 | CON4;CON1F;CON3F |
| | 3TO00036-0200 | 输出插座 | PH:2.0mm,3PIN,180°,直插,ZYA2001-FV03P,鸿盛富康 | PCS | | CON4;CON1F;CON3F |
| | 3TO00036-4300 | 输出插座 | PH:2.0mm,3PIN,白色,N/A,镀锡,DIP,立式,A2001A-03-A5WA-P | PCS | | CON4;CON1F;CON3F |
| 38 | 5IJ00007-2100 | 接地片 | 12.6*4.0*0.4mm 表面镀锡 | PCS | 2 | G1;G2 |
| | 5IJ00007-2800 | 接地片 | 12.5*3.3*0.4mm 表面镀锡 | PCS | | G1;G2 |
| 39 | 8LB00008-4100 | 磁珠 | 空心,K5A,RH,3.5*2.0*3 | PCS | 3 | FOR D300(正负极);Q100(S极) |
| | 8LB00008-4400 | 磁珠 | 空心,C5A,RH,3.5*1.8*3 | PCS | | FOR D300(正负极);Q100(S极) |
| | 8LB00008-6100 | 磁珠 | 空心,C5A,RH,3.5*2.0*3.0 | PCS | | FOR D300(正负极);Q100(S极) |
| 40 | 5IF00007-0600 | 热缩套管 | Φ8,黑色,125度,UL认证 | 米 | 0.028 | FOR F1 |
| 41 | 5IF00003-0600 | 热缩套管 | Φ10,黑色,125度,UL认证 | 米 | 0.018 | FOR VR1 |
| 42 | 5SA00017-0300 | 螺丝 | M3*0.5*9mm,沉头PM3*9L,镀镍, | PCS | 3 | FOR BG1;Q300;Q100 |
| 43 | 5SB00001-0300 | 螺母 | 六角螺母,M3*0.5,P,H,Ni,(+)镀镍 | PCS | 3 | FOR BG1;Q300;Q100 |
| 44 | 6PB00912-3100 | 包装箱 | 590*390*255mm,A=A,L1.2mW1m奥源箱B | PCS | 0.033333 | FOR PACK |
| 45 | 6PB00919-3100 | 平卡 | 576*376mm,B=B,平卡,L1.2mW1m奥源箱A | PCS | 0.066667 | FOR PACK |
| 46 | 6PB00921-3100 | 刀卡 | 576*216mm,B=B,5刀卡,L1.2mW1m奥源箱B | PCS | 0.366667 | FOR PACK |
| 47 | 6PB00922-3100 | 刀卡 | 376*216mm,B=B,11刀卡,L1.2mW1m奥源箱B | PCS | 0.133333 | FOR PACK |
| 48 | 6RE00146-1800 | 气泡袋 | PE,防静电,红色,长230mm*宽210mm,230mm端开口,(单面) | PCS | 1 | FOR PACK |
| 49 | 6LC00011-0400 | 外箱标签 | 纸质,102*76, | PCS | 0.033333 | FOR PACK |
| 50 | 6LD00023-0300 | 条码标签 | 纸质10*30,AY,XXXX,X,XXXXX | PCS | 1 | FOR PACK |
| 51 | 6LC00003-0300 | ROHS标签 | Φ20,绿底白字, | PCS | 0.033333 | FOR PACK |
| | 6LC00003-0400 | ROHS标签 | Φ20,绿底白字, | PCS | | FOR PACK |
| | 6LC00003-1500 | ROHS标签 | Φ20,绿底白字, | PCS | | FOR PACK |
| 52 | 6LD00850-0300 | 标签 | 纸质10*30,AY156D-4SF16 | PCS | 1 | FOR PACK |
| 53 | 6LD00002-0300 | 标签 | 纸质,Φ8,黄底黑字,HI-POT | PCS | 1 | FOR PACK |
| | 6LD00002-0400 | 标签 | 纸质,Φ8,黄底黑字,HI-POT | PCS | | FOR PACK |

| | | | | | | |
|---|---|---|---|---|---|---|
| | 6LD00002-1500 | 标签 | 纸质,Φ8,黄底黑字,HI-POT | PCS | | FOR PACK |
| 54 | 6LD00232-0100 | 环保标签纸 | Φ8,绿底黑字,反面背胶,数字宋体,客户号080 | PCS | 1 | FOR PACK |
| | 6LD00232-1500 | 环保标签纸 | Φ8,绿底黑字,反面背胶,数字宋体,客户号080 | PCS | | FOR PACK |
| 55 | 6JC00001-1400 | 绿胶 | 螺丝胶L-391B | 千克 | 0.00005 | FOR PACK |
| 56 | 6JE00001-1200 | RTV胶 | 707阻燃硅胶 | 千克 | 0.0015 | FOR PACK |
| 57 | 6JF00001-1100 | 散热膏 | 导热硅脂,T4303 | 千克 | 0.00005 | FOR PACK |
| 58 | 6SM00003-0900 | 助焊剂 | TF-328 | 千克 | 0.0032 | FOR PACK |
| 59 | 6SC00001-0800 | 锡条 | 锡铜镍,SnCu0.3(Ni,0.05)无铅 | 千克 | 0.003 | FOR PACK |
| 60 | 5IE00493-3400 | 绝缘麦拉片 | 200*165*0.43mm,FR700材质,黑色,AY156D-4SF01,隔离柱 | PCS | 1 | FOR PACK |
| 61 | 5IA00008-2800 | 固定胶柱 | 8.6*Φ7.1*3.75mm,PA66,乳白色,隔离柱子DL-3.0 | PCS | 2 | FOR PACK |
| 62 | 5IB00105-2700 | 透明胶带 | 50000*55*0.05mm,BOPP材质,透明,封箱胶带 | 米 | 3.86 | FOR PACK |

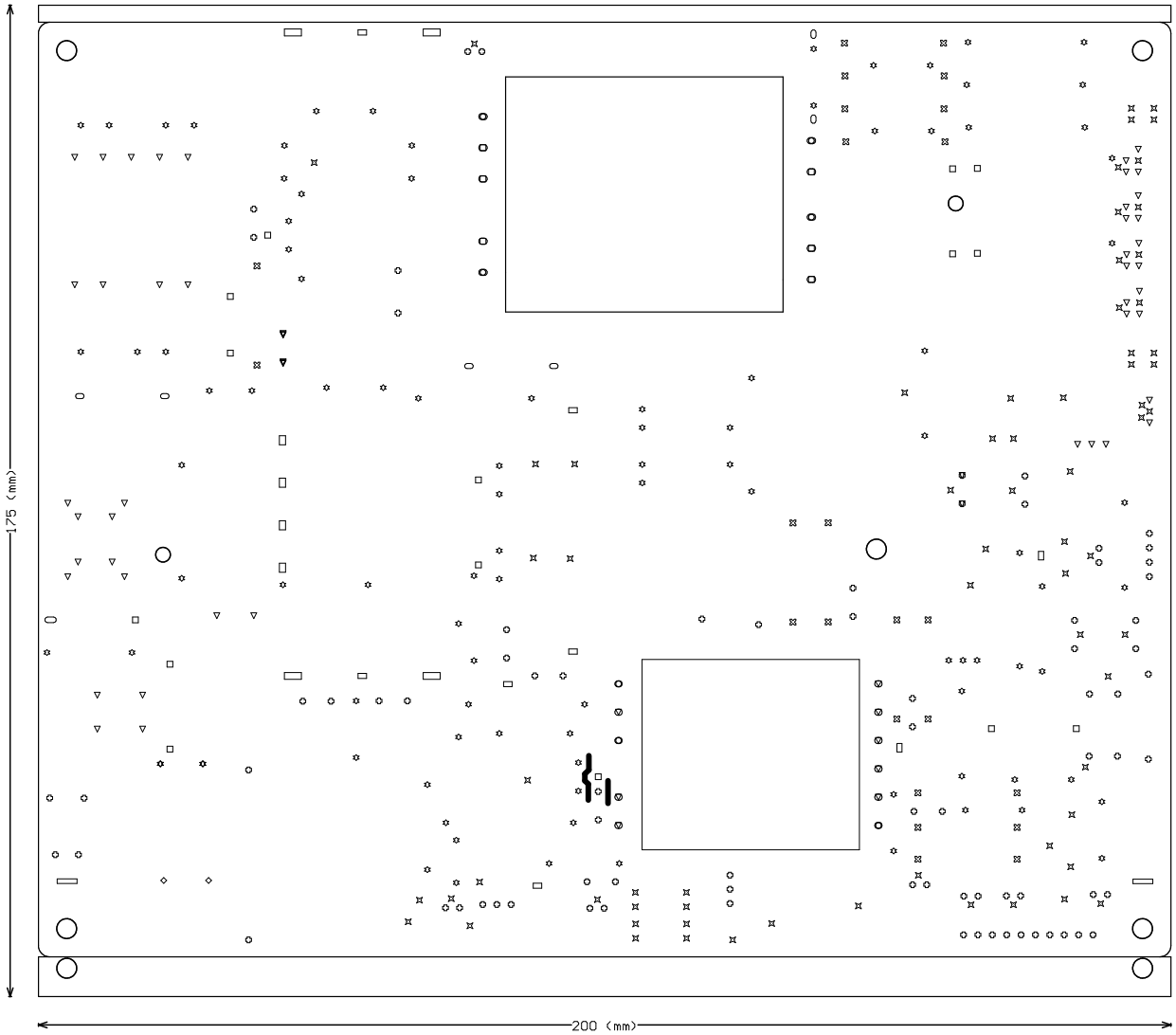


| | | | | |
|---|---|---|---|---|
| ⌑ | 68 | 31.496mil | 0.8mm | PTH |
| ▽ | 60 | 35.433mil | 0.9mm | PTH |
| ○ | 80 | 39.37mil | 1mm | PTH |
| ✡ | 100 | 43.307mil | 1.1mm | PTH |
| □ | 21 | 47.244mil | 1.2mm | PTH |
| ⊠ | 24 | 59.055mil | 1.5mm | PTH |
| ○ | 7 | 70.866mil | 1.8mm | PTH |
| ◇ | 2 | 94.488mil | 2.4mm | PTH |
| | 362 | Total | | |

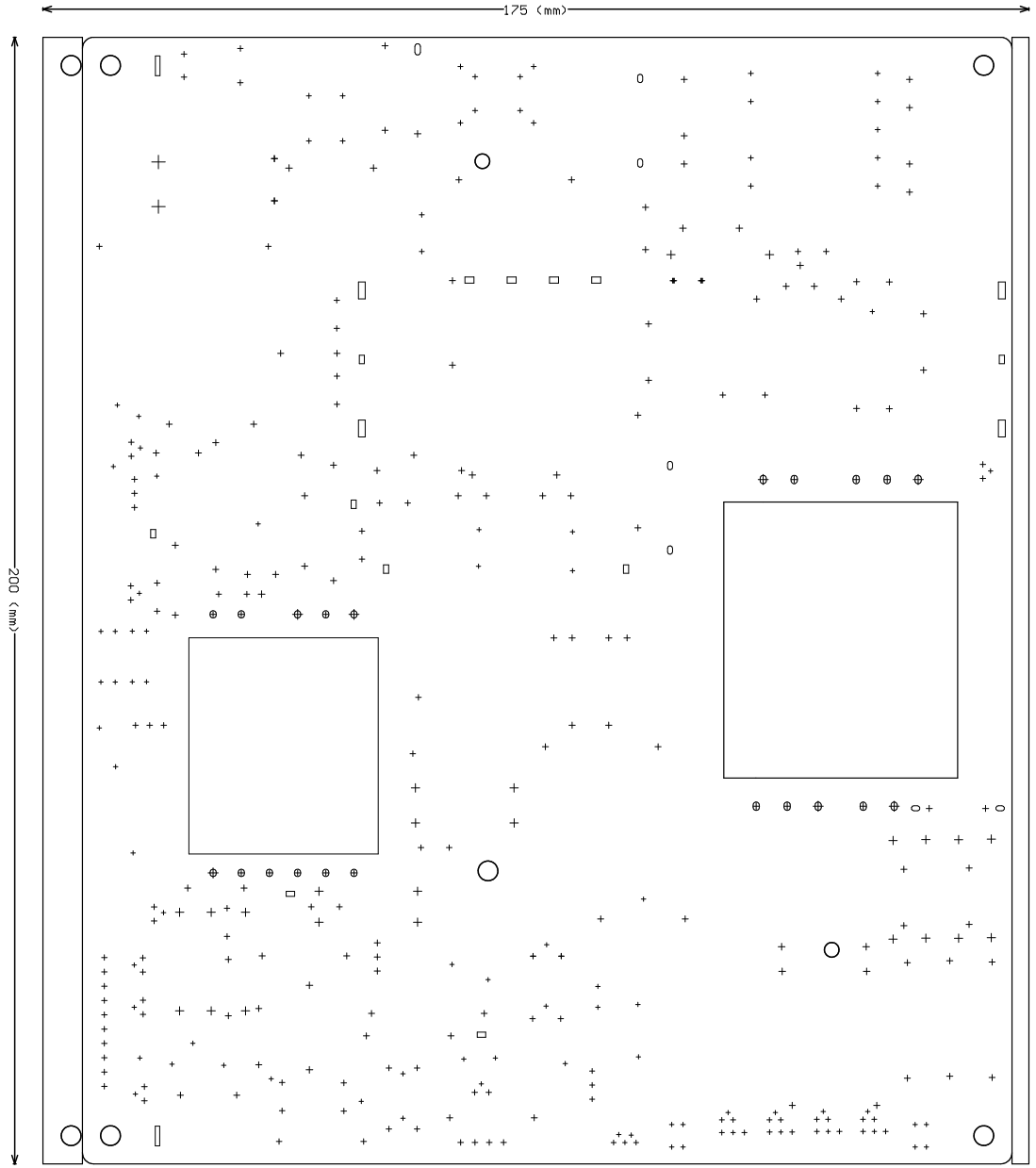
175 (mm)
200 (mm)

200 (mm)
125 (mm)

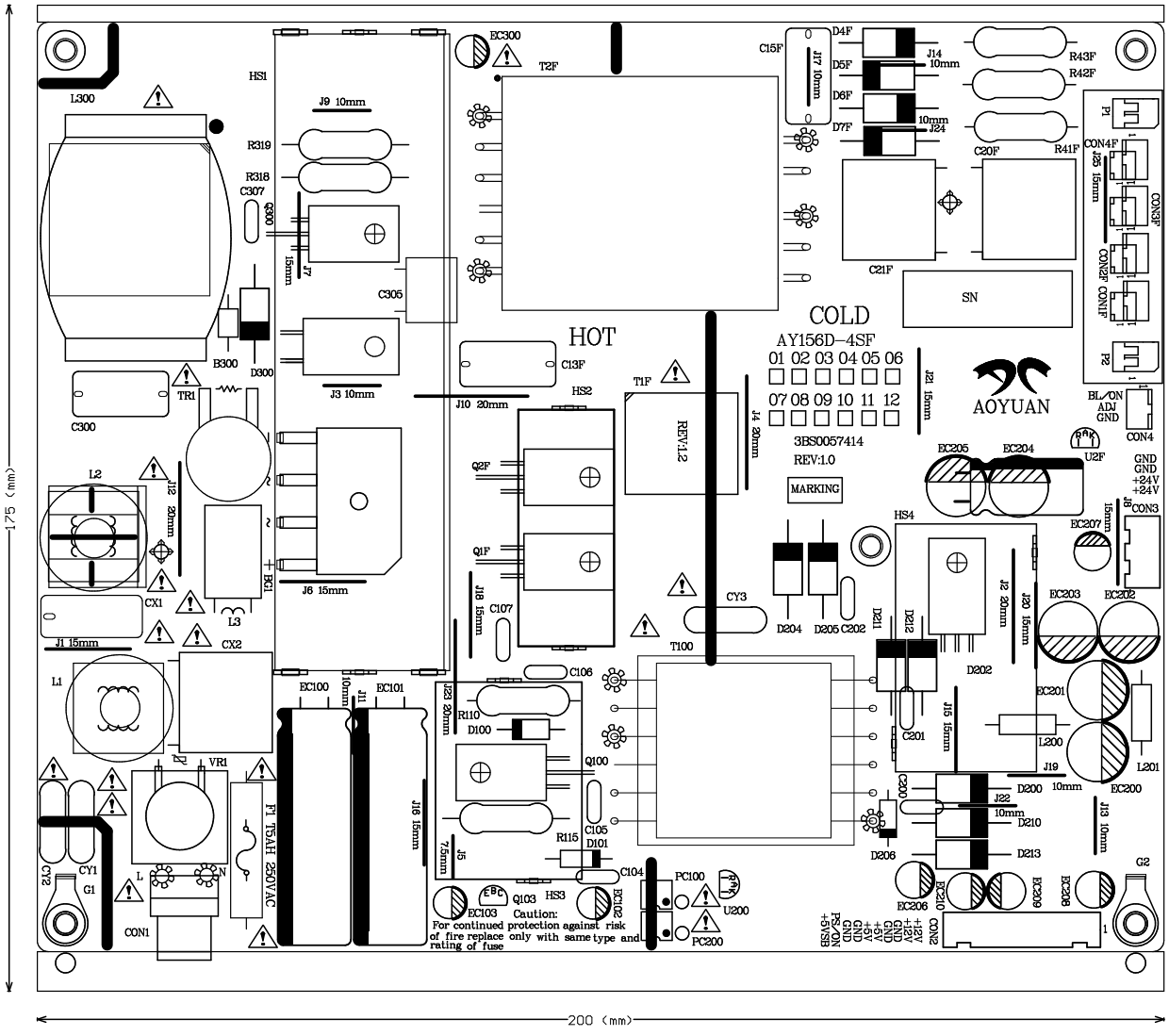

HOT
COLD
AY156D-4SF
01 02 03 04 05 06
07 08 09 10 11 12
3BS0057414
REV:1.0
MARKING
AOYUAN
SN
REV:1.2
Caution:
For continued protection against risk of fire replace only with same type and rating of fuse
F1 T5AH 250VAC
175 (mm)
200 (mm)

HOT
COLD
Caution:
For continued protection against risk of fire replace only with same type and rating of fuse
200 (mm)
275 (mm)

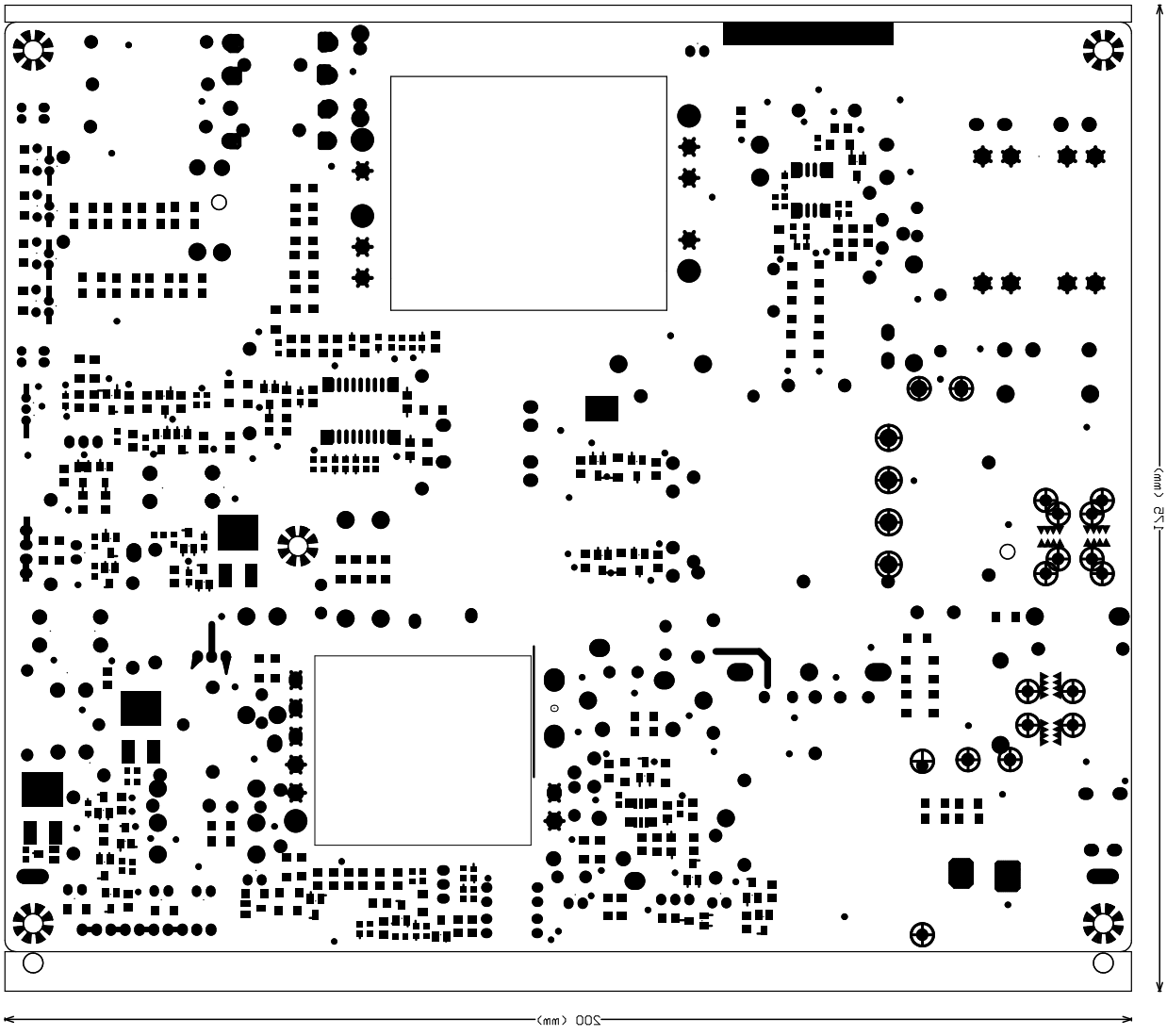
200 (mm)
125 (mm)